HCFA

Y7 Smart High-end Servo System

Pulse-type

User Manual

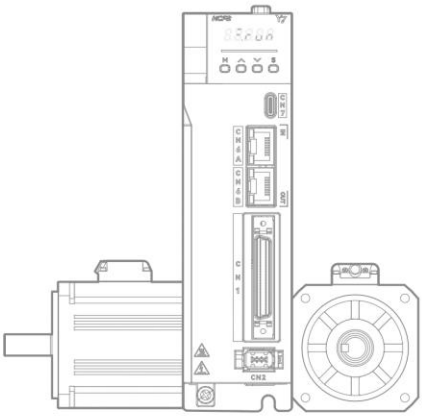

February, 2023 V1.0
Manula No.: ATC/MY7SPH2310

Catalog

Preface.....IX
Safety Precautions XII
Notation Used in the Manual.....XVI
Chapter 1 Overview.....1
1.1 Y7S Features.....3
1.2 Y7S Nameplate 3
1.3 Naming Rules.....4
1.4 Part Name for Y7S Series 220VAC Servo Drive.....5
1.4.1 220VAC 400W Servo Unit Part Name Diagram 5
1.4.2 220VAC 750W/1kW/1.5kW/2kW Servo Unit Part Name Diagram 6
1.5 Part Name for Y7S Series AC380V Servo Drive.....7
1.5.1 380VAC 3kW and below Servo Drive Part Name Diagram 7
1.5.2 380VAC 5kW Servo Drive Part Name Diagram..... 8
1.5.3 380VAC 6kW/7.5kW Servo Drive Part Name Diagram 9
1.5.4 380VAC 11kW/15kW/22kW Servo Drive Part Name Diagram 10
1.6 Y7S Model Specifications.....12
1.6.1 220VAC Servo Drive Specifications 12
1.6.2 380VAC Servo Drive Specification..... 12
1.7 Y7S Servo Drive Ratings and Specifications.....13
1.7.1 220VAC Basic Specifications..... 13
1.7.2 380VAC Basic Specifications..... 13
1.7.3 Environmental Specifications..... 14
1.7.4 Technical Specifications..... 14
1.8 External Dimensions for Y7S Servo Drive.....15
1.8.1 Y7S Servo Drive Configuration 15
1.8.2 SIZE A Servo Drive External Dimension Drawing..... 17
1.8.3 SIZE B Servo Drive External Dimension Drawing..... 17
1.8.4 SIZE C Servo Drive External Dimension Drawing..... 18
1.8.5 SIZE D Servo Drive External Dimension Drawing..... 18
1.8.6 SIZE EServo Drive External Dimension Drawing 19
1.8.7 SIZE F Servo Drive External Dimension Drawing..... 19
1.8.8 SIZE G Servo Drive External Dimension Drawing..... 20
1.9 Installation.....20
1.9.1 Installation Instructions in Control Panel 20
1.9.2 Structural Installation Instructions..... 21
1.9.3 High Power Drive Installation Instructions 21
1.10 Maintenance and Inspection.....22
Chapter 2 Wiring and Connection 23
2.1 Precautions 25
2.1.1 Symbols 25
Table 2-1 Precaution Symbols..... 25
2.1.2 General Wiring Precautions..... 25

2.2 Connector-Type Terminal Definition Diagram 28
2.3 Fence-Type Terminal Definition Diagram 30
2.4 Main Circuit Wiring 32
2.4.1 Example of Main Circuit Wiring for Standard 220VAC Power Input 33
2.4.2 Example of Main Circuit Wiring for Standard 380VAC Power Input 34
2.4.3 Servo Drive of Single-phase 220V Power Input 36
2.4.4 DC Power Input 37
2.4.5 Circuit Breaker and Fuse Capacity 41
2.5 Wiring of regenerative resistor 42
2.5.1 220 VAC Regenerative Resistor 43
2.5.2 380VAC regenerative resistor basic specifications 43
2.6 Input and Output Signals (CN1) 44
2.6.1 Pin Arrangement of I/O Signal (CN1) Connector 45
2.6.2 Name and Function of Input Signal (CN1) 46
2.6.3 Input Signal Assignments 47
2.6.4 Input Circuit 49
2.6.5 Name and Function of Output Signal (CN1) 51
2.6.6 Output Signals AlPositions 51
2.6.7 Output Circuit 54
2.6.8 PG Output 54
2.6.9 Analog Input 55
2.6.10 Brake Signal 55
2.7 Encoder Signal (CN2) 56
2.7.1 Name and Function of Encoder Signal (CN2) 56
2.7.2 Wiring the Servo Unit to Encoder 57
2.8 Safety Function Signals STO (CN3) 59
2.8.1 Names and Functions of the Safety Function Signal (CN3) 59
2.8.2 Safety Input Circuit 61
2.8.3 Safety Output Circuit 61
2.8.4 Output Signal (EDM1 Signal) Specifications 62
2.8.5 Example of Wiring for Safety Terminals 62
2.9 The Second Encoder Interface CN4) 63
2.10 Communication Connector (CN6) 64
2.11 Brake Input Connection (CN10) 65
2.11.1 Brake wiring 65
2.12 Standard Wiring Diagram in Position/Speed/Torque Control Mode 67
2.12.1 Connection Example for Position Control (Pulse type) 67
2.12.2 Connection Example for Speed Control (Pulse type) 68
2.12.3 Connection Example for Torque Control (Pulse type) 69
2.13 Noise and Harmonic countermeasures 70
2.13.1 Countermeasures against Noise 70
2.13.2 Noise Filter Wiring and Connection Precautions 72
2.13.3 Connection of Reactor for Harmonic Suppression 75

Chapter 3 Panel Operation Procedures and Display 77
3.1 Panel Operation Procedures and Display 78
3.1.1 Panel Operator Keys 78
3.1.2 Changing Modes 78
3.1.3 Status Display and Its Judgment 79
3.2 Utility Function (Fn □□□) 80
3.3 Parameter Setting (Pn□□□) 81
3.3.1 Numeric Settings 81
3.3.2 Selecting Functions 81
3.4 Operation of Monitor display (Un□□□) 82
Chapter 4 Trial Operation 83
4.1 Inspection and Precautions Before Trial Operation 84
4.2 Trial Operation for Servo Motor 84
4.3 Origin Search Positioning (Fn003) 84
4.4 Trial Operation from Host Controller for Servo Unit without a Load 84
4.4.1 Input Signal Connection and Parameter Settings 85
4.4.2 Trial Operation for Speed Control 85
4.4.3 Trial Operation for Position Control from the Host Controller with the Servo Drive Used for Speed Control 85
4.4.4 Trial Operation for Position Control 86
4.5 Trial Operation with the servo motor Connected to the Machine 87
4.6 Trial Operation of Servo Motor with Brake 88
Chapter 5 Application Function 89
5.1 Precautions 92
5.2 Automatic Detection of Connected Motor 92
5.3 Basic Function Settings 92
5.3.1 Power Settings 92
5.3.2 Control Mode Selection 93
5.3.3 Enable 93
5.3.4 Setting Rotation Direction of Servo Motor 94
5.3.5 Overtravel Setting 96
5.3.6 Holding Brake 99
5.3.7 Motor Stopping Methods for Servo OFF and Alarms 101
5.3.8 Operation for Momentary Power Interruptions 103
5.3.9 Setting of Motor Overload Detection Value 104
5.3.10 Regenerative Resistor Capacity Setting 104
5.4 Speed Control 105
5.4.1 Input specifications of Speed Command Signal 105
5.4.2 Setting of Speed Command Input Gain 105
5.4.3 Speed Command Offset Adjustment 106
5.4.4 Soft Start Settings 106
5.4.5 Speed Command Filter 107
5.4.6 Zero Clamping Function 108
5.4.7 Setting of Speed Coincidence Signal 109

5.5 Position Control 110
5.5.1 Basic Setting of Position Control 110
5.5.2 CLR Signal Settings 111
5.5.3 Command Pulse Input Multiplication Switching 112
5.5.4 Electronic Gear Ratio 113
5.5.5 Smooth Function 114
5.5.6 Positioning Completion Signal 114
5.5.7 Near signal 116
5.5.8 Command Pulse Inhibition Function 116
5.5.9 Encoder Divided Pulse Output 118
5.5.10 Multiturn Limit Settings 119
5.5.11 When an alarm (A.CC0) for the upper limit of the number of rotations is displayed 120
5.6 Torque Control 120
5.6.1 Input specifications of Torque Command Signal 120
5.6.2 Setting of Torque Command Input Gain 121
5.6.3 Torque Command Offset Adjustment 121
5.6.4 Torque Command Filter Settings 122
5.6.5 Speed Limit during Torque Control 122
5.7 Internal Set Speed Control 124
5.7.1 Input Signals for Internal Set Speed Control 124
5.7.2 Selection of Internal Set Speed Control 124
5.7.3 Internal Set Speed Parameters 125
5.7.4 Changing Internal Set Speeds with Input Signals 125
5.7.5 Operating Example 125
5.8 Selecting Combined Control Methods 126
5.8.1 Switching between Internal Set Speed Control and Another Control Method (Pn000.1 = 4, 5,6) 126
5.8.2 Switching between Internal Set Speed Control and Another Control Method (Pn000.1 = 7 , 8 , 9) 129
5.8.3 Switching between Internal Set Speed Control and Another Control Method (Pn000.1 = A , B) 129
5.9 Selecting Torque Limits 129
5.9.1 Internal Torque Limits 129
5.9.2 External Torque Limits 130
5.9.3 Limiting Torque with an Analog Command 131
5.9.4 Limiting Torque with an External Torque Limit and an Analog Voltage Command 132
5.9.5 Torque Limit Detection Signal 133
5.10 Security Function 134
5.10.1 Hard wire Base Block (HWBB) Function 134
5.10.2 External Device Monitoring (EDM1) 138
5.10.3 Application Examples for Safety Functions 139
5.10.4 Validating Safety Functions 141
5.10.5 Safety Precautions When Using the Security Function 141
5.11 Absolute Encoder 141
5.11.1 Absolute Data Request (SENS_ON command) 142
5.11.2 Battery Replacement 142

5.11.3 Sequence for Reading and Outputting Position Data from Absolute Encoder 144
5.11.4 Resetting the Absolute Encoder (when an Alarm occurs) 147
5.12 Position Comparison Output Function 148
5.12.1 Function Description 148
5.12.2 Related Parameters 148
5.12.3 Function Running 149
5.13 Gravity Compensation 150
5.13.1 Required Parameters Settings 152
5.13.2 Operating Procedure for Gravity Compensation 152
5.14 Other input and output signals 152
5.14.1 Input Signal Allocations 152
5.14.2 Alarm Output (ALM) Signal 152
5.14.3 Warning Output (/WARN) Signal 152
5.14.4 Alarm Reset (/ALM-RST) Signal 153
5.14.5 Rotation Detection Output Signal (/TGON) 153
5.14.6 Servo Ready Output (/S-RDY) Signal 153
Chapter 6 Tuning 154
6.1 About Tuning 156
6.1.1 Basic Tuning Method 156
6.1.2 Monitoring during Tuning 156
6.1.3 Safety Precautions at Tuning 158
6.2 Tuning-less Function 160
6.2.1 About the Tuning-less Function 160
6.2.2 Tuning-less Value Setting (Fn200) 162
6.2.3 Related Parameters 163
6.3 Advanced Auto Tuning 1 - By HCServoWorks Internal Position Command 163
6.3.1 About Auto Tuning 1 164
6.3.2 Precautions for Advanced Auto-tuning 1 166
6.4 Advanced Auto-Tuning 2 - Via Host Controller Position Commands 167
6.4.1 About Advanced Auto- tuning 2 167
6.4.2 Precautions for Advanced Auto tuning 2 169
6.5 One-parameter Tuning 169
6.5.1 About One-parameter Tuning 170
6.5.2 Operation Steps for One-parameter Tuning 170
6.6 Supplements for Auto-tuning 170
6.6.1 Supplements for Function 170
6.6.2 Related Parameters 172
6.7 Adjust Anti-resonance Control Function 173
6.7.1 About Adjust Anti-resonance Control Function 173
6.7.2 Operation Steps of Anti-resonance Control Function 173
6.7.3 Related Parameters 174
6.8 Vibration Suppression Function 174
6.8.1 About the Vibration Suppression Function 174

6.8.2 Precautions for Vibration Suppression Function....175
6.8.3 Related Parameters....176
6.9 Adjustment Application Function....176
6.9.1 Gain Switching....176
6.9.2 Manual Adjustment of Friction Compensation....180
6.9.3 Current Control Mode Selection Function....181
6.9.4 Current Gain Value Setting Function....181
6.9.5 Speed Detection Method Selection....181
6.10 Other Adjustments Functions....182
6.10.1 Feedforward....182
6.10.2 P (Proportional) control....182
6.10.3 Setting Mode Switch (P control/PI control switching)....183
6.10.4 Torque Command Filter....184
Chapter 7 Auxiliary Function....187
7.1 Auxiliary Function List....188
7.2 Display of Alarm Record (Fn000)....188
7.3 JOG (Fn002)....189
7.4 Origin Search (Fn003)....190
7.5 JOG Program (Fn004)....190
7.6 Initialize Parameters (Fn005)....192
The parameter setting initialization operation steps are as follows:....192
7.7 Clear Alarm History (Fn006)....192
7.8 Adjust Analog Monitor Output Offset (Fn00C)....192
7.9 Adjust Analog Monitor Output Gain (Fn00D)....193
7.10 Auto Tuning Motor Current Detection Signal Offset (Fn00E)....194
7.11 Manually adjust Motor Current Detection Signal Offset (Fn00F)....196
7.12 Writing Prohibition Setting (Fn010)....196
7.13 Display Servo Motor Model (Fn011)....197
7.14 Display Software Version (Fn012)....197
7.15 Initialize Vibration Detection Level(Fn01B)....198
7.16 Software Reset (Fn030)....199
Chapter 8 Monitoring Display....200
8.1 Monitoring Display List....201
8.2 Operation Example of Monitoring Display....201
8.3 How to Read 32-bit Decimal Display....201
8.4 Input Signal Monitoring....201
8.4.1 Confirmation of Input Signal Status....202
8.4.2 How to Judge Display State of the Input Signal....202
8.4.3 Display Examples of Input Signal....202
8.5 Output Signal Monitoring....203
8.5.1 Confirmation of Output Signal Status....203
8.5.2 Judgment Method of Output Signal Display Status....203
8.5.3 Examples of Output Signal Display....203

8.6 Monitoring Display at Power-ON 203
Chapter 9 Fully-closed Loop Function 205
9.1 Fully-closed Loop Model Establishment and Connection 206
9.2 Parameters Setting for Fully-closed Loop 207
9.3 Fully-closed Loop Setting Procedure 209
9.4 Fully-closed Loop Parameter Setting 209
9.4.1 Fully-closed Loop Encoder Direction Setting 209
9.4.2 Fully-closed Loop Encoder Pitch Setting 210
9.4.3 Electronic Gear Ratio Setting 211
9.4.4 Selection of Fully-closed Loop Speed Feedback 211
9.4.5 JOG in Fully-closed Loop Control 211
9.5 Fully-closed Loop Frequency Division Pulse Output Function 211
9.6 Fully-closed Loop Alarms and Solutions 212
Chapter 10 Alarm Display 213
10.1 When an Alarm Occurs 214
10.1.1 Alarm List 214
10.1.2 Causes and Troubleshooting 217
10.2 Warning Display 230
10.2.1 Warning List 230
10.2.2 Causes of Warnings and Troubleshooting 231
10.3 Causes and Troubleshooting Based on the Opeation and Conditions 233
Chapter 11 Auxiliary Functions and Parameter List 239
11.1 Auxiliary Function List 240
11.2 Parameter List 241

Preface

Thank you for using Y7S. This operation manual provides information about Y7 Smart Series High Performance Servo System (Y7S for short) - Pulse Servo Drive and Motor. Please follow this manual to ensure the correct use method. If you carry out the wrong use method and handling method, it will not only fail to give full play to the performance of the product, but also lead to accidents and shorten the service life of the product.

We hope that you will properly use this product based on carefully reading this instruction manual.

About the instruction manual

① Although every effort has been made to perfect the manual, please feel free to ask us if you have any doubts about the contents.

② The following items should be specified in the instruction manual of the product

・Danger, it is a high-voltage electric machine.

・Danger, voltage remains inside the terminals and machine after power cut off.

・Local high temperature

・Dismantling is strictly prohibited.

③ This product is subject to specification changes and function additions at any time due to performance upgrades and other reasons. No other notice will be given.

④ If you plan to obtain safety specifications for the equipment equipped with this product, please consult with us in advance.

⑤ To extend the service life of the motor and driver, please use them under the correct conditions of use. Please follow the instruction manual for details.

⑥ The operating instructions are as up-to-date as possible, so the contents may change from time to time. If you need a new version of the instruction manual, please contact us for a copy.

⑦ Reproduction of part or all of the contents of this User's Manual without the consent of the Company is prohibited.

Confirm when opening the box

- Whether the physical product matches the ordered one.
- Whether there was damage during delivery.
- If you find a problem, please contact your dealer.

Read the content before use

Thank you for using Y7S series pulse servo driver. This manual provides information about Y7S series pulse type servo drive, please make sure to refer to this manual when installing, using and maintaining Y7S series products. Incorrect use and handling methods will not only fail to give full play to the performance of the product and lead to a shortened product life, but will also cause accidents.

Please keep the manual so that you can refer to it when needed.

Terminology

For the terminology used in this manual, please refer to the following descriptions.

Terminology	Description
Servo motor	X2 series, X6 series servo motors
Servo Drive	Y7S Series Pulse Servo Drive

Servo system	A complete system consisting of a servo drive, a host controller and external equipment
Servo ON	Motor energized
Servo OFF	Motor not energized
Base blocking (BB)	Non-energized state formed by cutting off the base current of the power transistor of the current amplifier
Servo locking	The state in which the motor is stopped by a zero position command in the position loop
Main circuit cable	Cables connected to the main circuit terminals (main circuit power cables, control power cables, servo motor circuit cables, etc.)

This manual is intended for reading by.

- whom possesses knowledge of electrical engineering.
- whom is in charge of transporting and storing Y7S series pulse servo drives or related products.
- whom is responsible for installation, connection, commissioning, and maintenance of Y7S series pulse servo drive or related products.

Products Range of the Manual

This manual mainly provides information on the following products
Y7S Series Pulse Servo Drive

Confirmation when opening the box

Projects	Content
Whether the product matches the ordered one	
Whether the accessories are complete	
Whether there is any damage during the delivery.	

Manual Revision Notes

Versions	Revised content
V1.0	First Edition

Other notes

- The content of this manual will be modified with the hardware and software changes to the product and a series of related information such as product specifications, relevant updates will be released on the official website of HCFA: www.hcfa.cn without notice.
- The content of this manual is edited based on product information and customer requirements. If there is any doubt on the contents of the manual, welcome to call us or send an email to 400@hcfa.cn and follow the version number marked on the cover to help clarify.
- Reproduction, duplication, etc. of part or all of this manual is strictly prohibited.

Trademarks

- **EtherCAT® is owned by** Beckoff Automation GmbH, Germany; **MECHATROLINK®**owned by the MECHATROLINK Association is an open field network.

- Other products described in this manual, product names and trademarks or registered trademarks of products are the property of respective companies and are not our products.

Safety Precautions

When installation, wiring, operation, maintenance and inspection, always read this information and heed the precautions that are provided.

- **For ignoring the contents of the manual and using the product incorrectly, the degree of harm and damage that may occur is distinguished by the following safety signs.**

Security markings and their meanings are as follows.

Danger	Indicates danger of death or serious injury may occur if precautions not heeded.
Caution	Indicates an accident that may result in injury or property damage if precautions not heeded
	Indicates the "Prohibited Items" that are prohibited from being implemented.
	Indicates the "mandatory" content that must be implemented.

Danger		
About Installation and Wiring		
	Do not connect the motor directly to a commercial power source.	There is a risk of fire and malfunction.
	Do not place combustible materials around the motor or drive.	There is a risk of a fire accident.
	The drive must be protected by an outer case. When setting up the protective outer case, the distance between the outer case wall, other machines and the drive must be maintained as specified in the operating instructions.	There is a risk of electric shock, fire and malfunction.
	It should be installed in a place where there is less dust and where it will not come into contact with water, oil, etc.	There is a risk of electric shock, fire, malfunction and breakage.
	Motors and drives are mounted on non-combustible materials such as metal.	There is a risk of a fire accident.
	Be sure to have a professional electrician perform the wiring operation.	There is a risk of electric shock.
	The FG terminal of the motor and driver must be grounded.	There is a risk of electric shock.
	The upper circuit breaker must be disconnected in advance for proper wiring.	There is a risk of electric shock, injury, malfunction, and breakage.
	The cable should ensure that the connection is good and the energized parts must be insulated with insulating materials to effectively achieve insulation.	There is a risk of electric shock, fire and malfunction.
About Operation		
	Do not touch the inside of the drive.	There is a risk of burning and electric shock

	Do not allow the cable to be damaged, subjected to excessive external force, heavy pressure, or pinched.	There is a risk of electric shock and malfunction.
	Do not touch the rotating part of the motor while it is running.	There is a risk of injury accidents.
	Do not use the cable by immersing it in oil or water.	There is a risk of electric shock, injury and fire accidents.
	Do not do wiring and operation with wet hands	There is a risk of electric shock, injury and fire accidents.
	Do not touch the keyway with your bare hands when using a motor with a keyway on the shaft end,	There is a risk of injury accidents.
	The temperature of the motor, driver, and heat sink will rise, so do not touch them.	There is a risk of burning or component damage accidents.
	Do not use external power to drive the motor.	There is a risk of a fire accident.
About other precautions on use		
	Be sure to confirm safety after an earthquake.	There is a risk of electric shock, injury and fire accidents.
	To prevent fire and personal accidents in the event of an earthquake, it should be practically set up and installed.	There is a risk of injury, electric shock, fire, malfunction, and breakage.
	Be sure to set up an emergency stop circuit on the outside to ensure that you can stop the operation and cut off the power in time in case of emergency.	There is a risk of injury, electric shock, fire, malfunction, and breakage.
About maintenance and spot checks		
	The drive has dangerous high voltage parts. When performing wiring and point inspection, the power must be disconnected and discharged (5 minutes or more). What’s more, it is absolutely not allowed to be disassembled.	There is a risk of electric shock accidents.

Attention		
About installation and wiring		
	The motor and drive are to be combined in the specified match.	There is a risk of fire and malfunction.

	Do not touch the connector terminals directly.	There is a risk of electric shock and malfunction.
	Pay attention to the vent not to be blocked, or get foreign objects into.	There is a risk of electric shock and fire.
	The test run must be performed with the motor fixed and separated from the rest of the mechanical system. It must be installed on the mechanical system after confirmation.	There is a risk of injury accidents.
	Observe the specified installation method and installation direction.	There is a risk of injury and malfunction.
	Please install properly according to the weight of the equipment itself and the rated output of the product.	There is a risk of injury and malfunction.
About operation and running		
	Do not stand on the product, or place heavy objects on the product.	There is a risk of electric shock, injury, malfunction and breakage.
	Extreme gain adjustments and changes are prohibited	There is a risk of malfunction and breakage.
	Do not use in areas exposed to direct sunlight.	There is a risk of a malfunction.
	Do not subject the motor and the motor shaft to strong shocks.	There is a risk of a malfunction.
	The purpose of the motor's built-in brake is to holde and it is prohibited to be used in the usual braking situations.	There is a risk of injury and malfunction.
	When power is restored after a power outage, there is a possibility of sudden start-up, so please do not approach the machine. Be sure to set the machine properly to ensure personal safety	There is a risk of injury accidents.
	Do not use faulty or broken motors and drives.	There is a risk of electric shock, fire, and injury.
	Please check if the power supply specification is normal.	There is a risk of failure.
	The holding brake is not a stopping device to ensure the safety of the machine. Please install a stopping device on the machine side to ensure safety.	There is a risk of injury accidents.
	When an alarm is raised,troubleshooting the causes and ensure safety, then release the alarm and restart.	There is a risk of injury accidents.
	Relays for brakes and emergency stop circuit breakers need to be connected in series.	There is a risk of injury and malfunction.
About handling and storage		
	It cannot be stored in places where rain and water drops are splashed, or where there are toxic gases and liquids.	There is a risk of a malfunction.
	Do not grip the cable or motor shaft when handling.	There is a risk of injury and malfunction.
	Take care of falling or overtuning when handling and	There is a risk of injury and malfunction.

	installation.	
	If long-term storage is required, please contact us with the information listed in this manual.	The cause of the malfunction.
	Please store the products in a place that conforms to the storage environment specified in this manual.	There is a risk of a malfunction.
About other precautions on use		
	When disposing of the battery, please insulate the battery with tape, etc. and dispose of it according to the regulations of the relevant department.	
	Please dispose of it as industrial waste when it is disposed of.	
About maintenance and spot checks		
	Do not disassemble for repair work other than by our company.	There is a risk of a malfunction.
	The main circuit power switch should not be turned on and off frequently.	There is a risk of a malfunction.
	If the drive fails, disconnect the control power and main circuit power.	There is a risk of a fire accident.
	Be sure to cut off the main power when not in use for a long time.	There is a risk of injury accidents
About maintenance and spot checks		

〈Warranty Period〉

- The product is guaranteed for 18 months from the month of manufacture of our company. However, for motors with brakes, it is a prerequisite that the number of acceleration and deceleration of the shaft does not exceed the service life.

〈Guarantee content〉

- Under normal use in accordance with this manual, repair is free of charge in the event of a failure during the warranty period. However, if the following faliure occurs, repair will be charged even if the product is in warranty period,

I Wrong way of use, and inappropriate repair and modification.

II Dropping, and damage not due to quality issue.

III Use the product out of the product specifications.

IV Fire, earthquake, falling lightning, wind and flood, salt damage, voltage anomalies and other disasters.

V Water, oil, metal pieces, other foreign objects intrusion.

- The scope of the warranty is the body of the delivered goods, and any damage caused by the failure of the delivered goods is judged to be out the scope of compensation.

Notation Used in the Manual

Notation for Reverse Signals

The names of reverse signals (i.e., ones that are valid when low) are written with a forward slash (/) before the signal abbreviation. For example, BK is written as /BK.

Notation for Parameters

The notation depends on whether the parameter requires a numeric setting (parameter for numeric setting) or requires the selection of a function (parameter for selecting functions).

Control modes available for this parameter.
Position: Position Control
Speed: Speed control
Torque: Torque control

Numeric Settings

Pn300	Speed command input gain			Position Speed Torque	
	Setting range	Set unit	Default setting	When Enabled	Classification
	150-3000	0.01V	600 (6.00V)	After restart	Backup

Parameter number

Parameters of Settable range

The "minimum" setting unit (setting increment) set in the parameter

Indicates the factory parameter setting value

Effective time after changing the parameter number

Parameter classification

Function selection type

Parameters		Meaning	When Enabled	Classification
PN002	n. □0□□□□ Default Settings	Use the encoder according to encoder specifications.	After restart	Backup
	n. □1□□□	Use the encoder as an incremental encoder		

n. □□□□ indicates the function selection type, □ indicates the set value of each unit, and here indicates that the second digit is "1".

Function selection instructions

Effective time after changing the parameter number

Parameter classification

Writing example (Pn002.0 writing example)

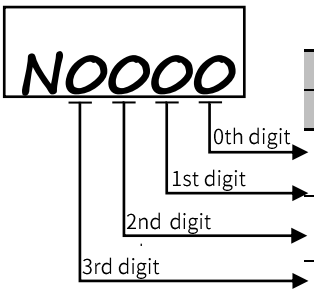

Digit Notation		Numeric Value Notation	
Notation	Meaning	Notation	Meaning
Pn002.0	Indicates the 0th digit of the parameter	Pn002.0=X	Indicates that the 0th digit of the parameter is "x"
Pn002.1	Indicates the 1st digit of the parameter	Pn002.1=X	Indicates that the 1st digit of the parameter is "x"
Pn002.2	Indicates the 2nd digit of the parameter	Pn002.2=X	Indicates that the 2nd digit of the parameter is "x"
Pn002.3	Indicates the 3rd digit of the parameter	Pn002.3=X	Indicates that the 3rd digit of the parameter is "x"

Chapter 1 Overview

Chapter 1 Y7S Overview....1
1.1 Y7 Smart Series Features....3
1.2 Y7S Nameplate Information....3
1.3 Y7S Drive Naming Rules....4
1.4 Y7S AC220V Servo Unit Part Name Diagram....5
1.4.1 AC220V 400W Servo Unit Part Name Diagram....5
1.4.2 AC220V 750W/1kW/1.5kW/2kW Servo Unit Part Name Diagram....6
1.5 Y7S AC380V Servo Unit Part Name Diagram....7
1.5.1 AC380V 3kW and below Servo Unit Part Name Diagram....7
1.5.2 AC380V 5kW Servo Unit Part Name Diagram....8
1.5.3 AC380V 6kW/7.5kW Servo Unit Part Name Diagram....9
1.5.4 AC380V 11kW/15kW/22kW Servo Unit Part Name Diagram....10
1.6 Y7S Model Specifications....12
1.6.1 AC220V Servo Unit Specifications....12
1.6.2 AC380V Servo Unit Specification....12
1.7 Y7S Servo Unit Ratings and Specifications....13
1.7.1 AC220V Basic Specifications....13
1.7.2 AC380V Basic Specifications....13
1.7.3 Environmental Specifications....14
1.7.4 Technical Specifications....14
1.8 Y7S Servo Unit External Dimensions....15
1.8.1 Y7S Servo Unit Configuration....15

1.8.2 Y7S Series Drive Mounting Dimensions 16
1.8.3 SIZE A Servo Unit External Dimension Drawing 17
1.8.4 SIZE B Servo Unit External Dimension Drawing 17
1.8.5 SIZE C Servo Unit External Dimension Drawing 18
1.8.6 SIZE D Servo Unit External Dimension Drawing 18
1.8.7 SIZE E Servo Unit External Dimension Drawing 19
1.8.8 SIZE F Servo Unit External Dimension Drawing 19
1.8.9 SIZE G Servo Unit External Dimension Drawing 20
1.9 Servo Unit Installation 20
1.9.1 Installation Instructions in Control Panel 20
1.9.2 Structural Installation Instructions 21
1.9.3 High Power Drive Installation Instructions 21
1.10 Maintenance and Inspection 22

1.1 Y7S Features

HCFA Y7 Smart series high performance servo system (hereinafter referred to as Y7S series) adopts a new control algorithm platform to meet the diverse control needs of customers in different industries with superior drive performance, richer bus and expansion functions. At the same time, it has 7 core features such as higher dynamic response, positioning accuracy and reliability, as well as faster speed, ease of use and adjustment-free function, which can fully help customers upgrade their industries and enhance the value and efficiency of machine tools. Let us work with you to redefine the performance of your machine.

For specific applications of pulse products, please refer to "Y7 Smart Series Advanced Servo System Pulse Type Manual" and for applications of EtherCAT products, please refer to "Y7 Smart Series Advanced Servo System EtherCAT Bus Technology Manual".

1.2 Y7S Nameplate

Y7S series Servo Drive version information can be viewed through the label on the side of the product.

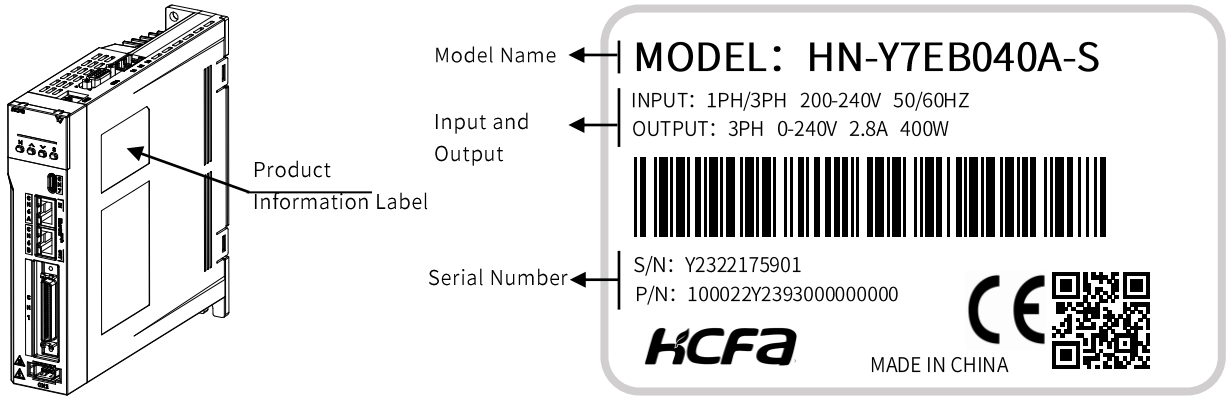

Figure 1-1 Y7S nameplate information diagram

Table 1-1 Label

Projects	Function Description
Model Name	Display the model name of this product
Input and output power	Shows the input and output power of the product INPUT: Current phase Rated input voltage Current frequency OUTPUT: Current phase Output voltage range Maximum output current Maximum output power
Serial number	Display the serial number of this product S/N: Internal serial number P/N: Internal serial number

1.3 Naming Rules

HN-Y7 E A 100 T-S 1-00 000

Product series	
HN-Y7	Single-axis

Functional classification	
N	General-purpose type
E	Standard type
F	Full-functional type

Product type	
A	Pulse
B	EtherCAT bus
K	MECHATROLINK-III bus
R	PROFINET bus

Power specifications	
040	400W
075	750W
100	1KW
150	1.5KW
200	2KW
300	3KW
500	5KW
600	6KW
750	7.5KW
111	11KW
151	15KW
221	22KW

Product iteration serial number

Hardware identification

Software identification

Control power supply	
A	AC control power supply
S	Advanced type

Voltage specification	
A	AC220V
T	AC380V

1.4 Part Name for Y7S Series 220VAC Servo Drive

1.4.1 220VAC 400W Servo Unit Part Name Diagram

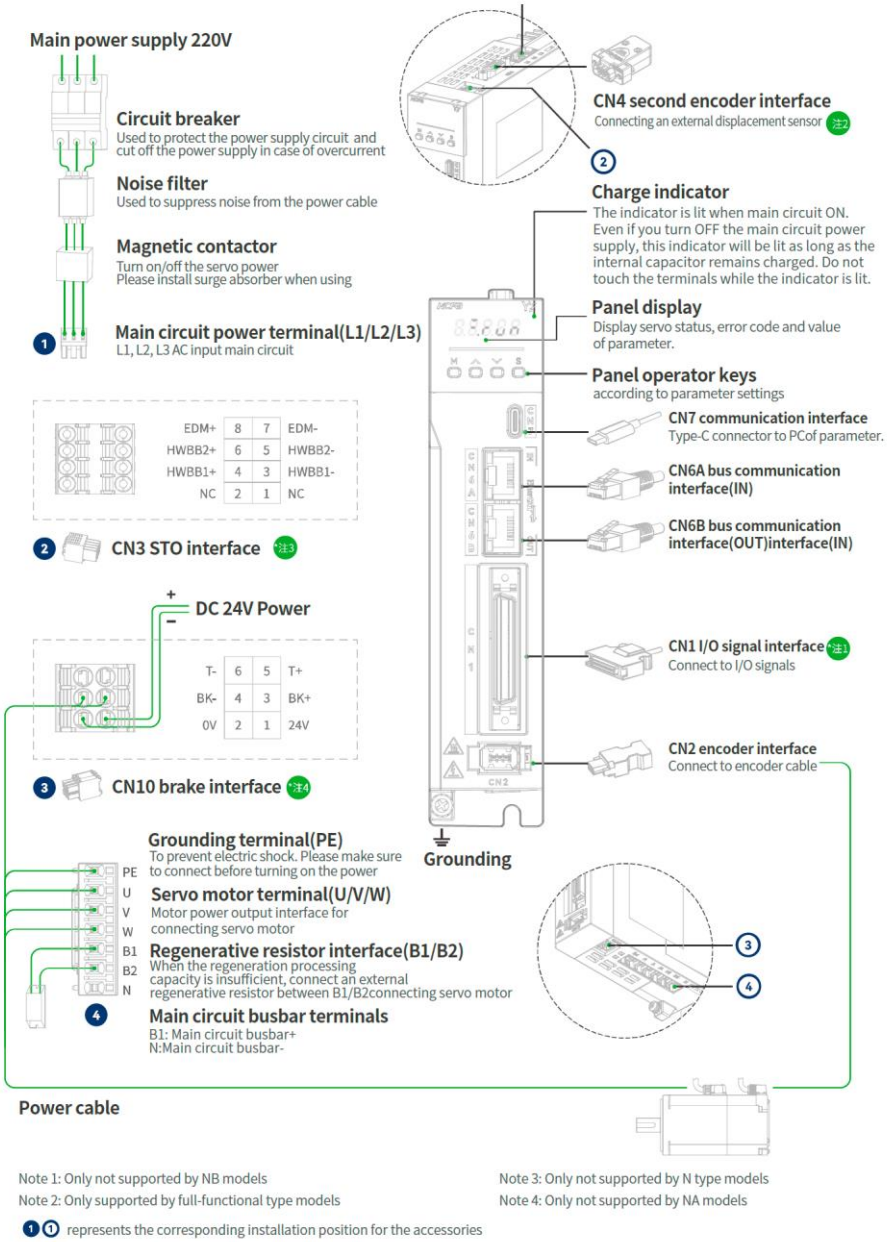

Note 1: Only not supported by NB models
Note 2: Only supported by full-functional type models
Note 3: Only not supported by N type models
Note 4: Only not supported by NA models
1 ① represents the corresponding installation position for the accessories

Figure 1-2 220VAC 400W Servo Unit Part Name Diagram

1.4.2 220VAC 750W/1kW/1.5kW/2kW Servo Unit Part Name Diagram

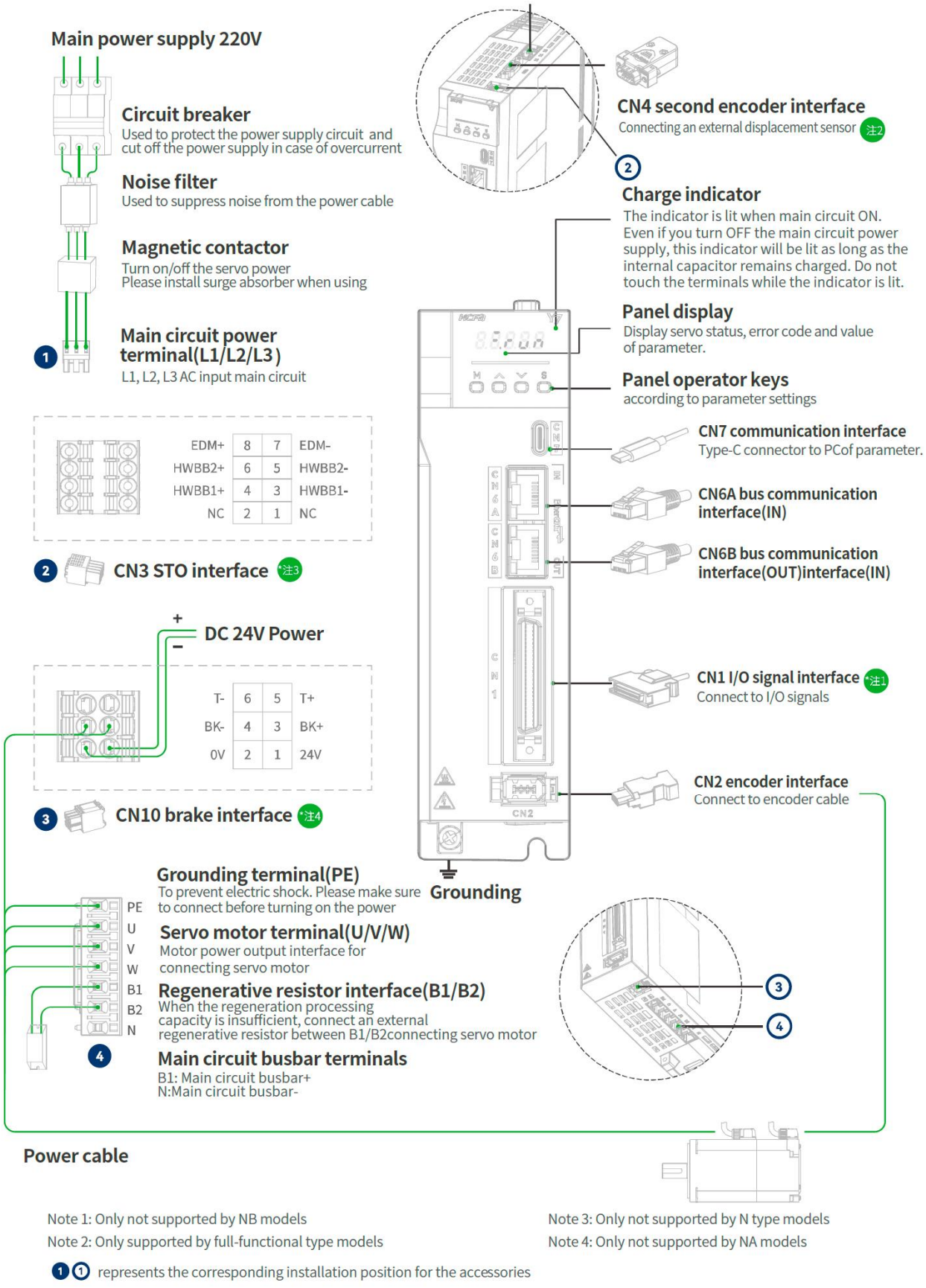

Note 1: Only not supported by NB models

Note 2: Only supported by full-functional type models

Note 3: Only not supported by N type models

Note 4: Only not supported by NA models

1 ① represents the corresponding installation position for the accessories

Figure 1-3 750W/1kW/1.5kW/2kW Servo Unit Part Name Diagram

1.5 Part Name for Y7S Series AC380V Servo Drive

1.5.1 380VAC 3kW and below Servo Drive Part Name Diagram

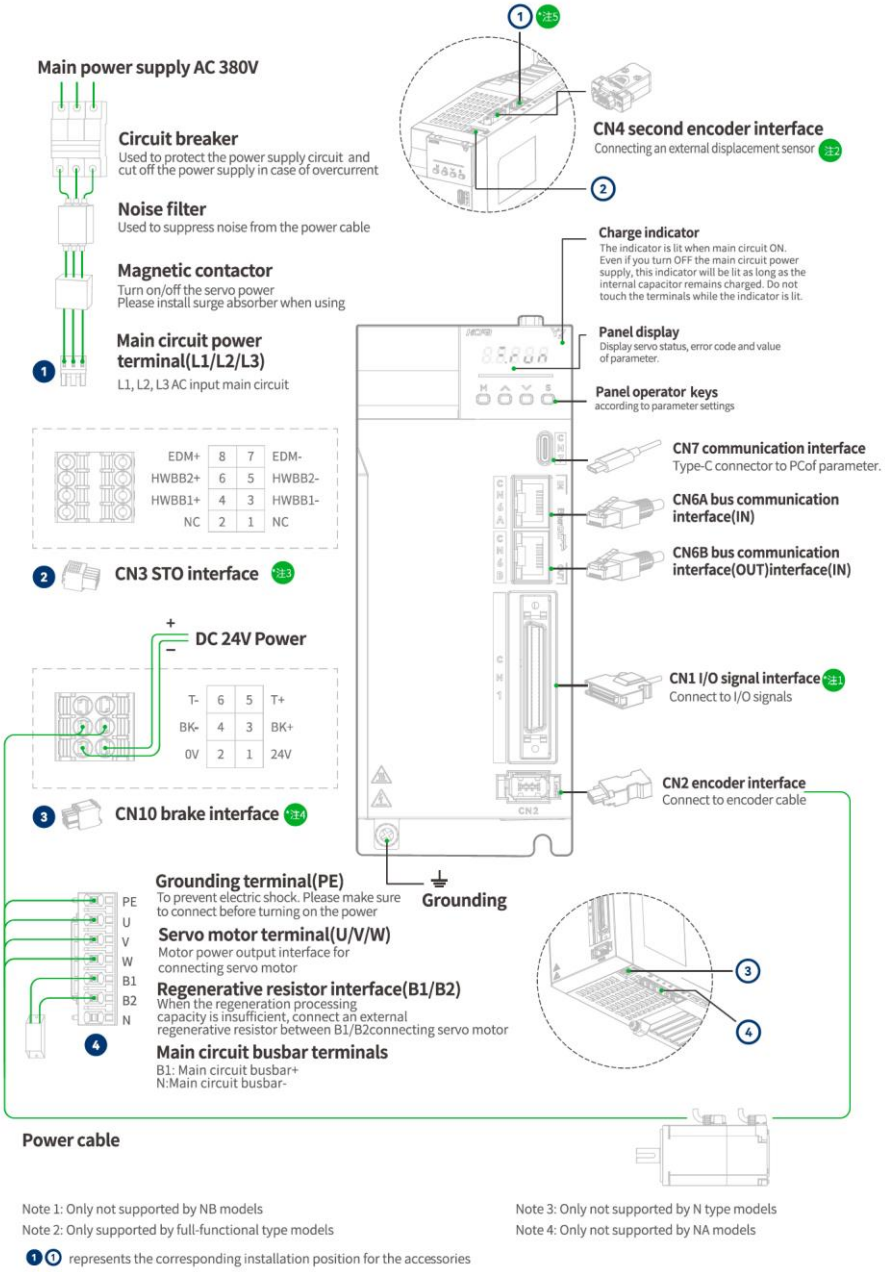

Figure 1-5 Y7S 380VAC 3kW Servo Unit Part Name Diagram

1.5.2 380VAC 5kW Servo Drive Part Name Diagram

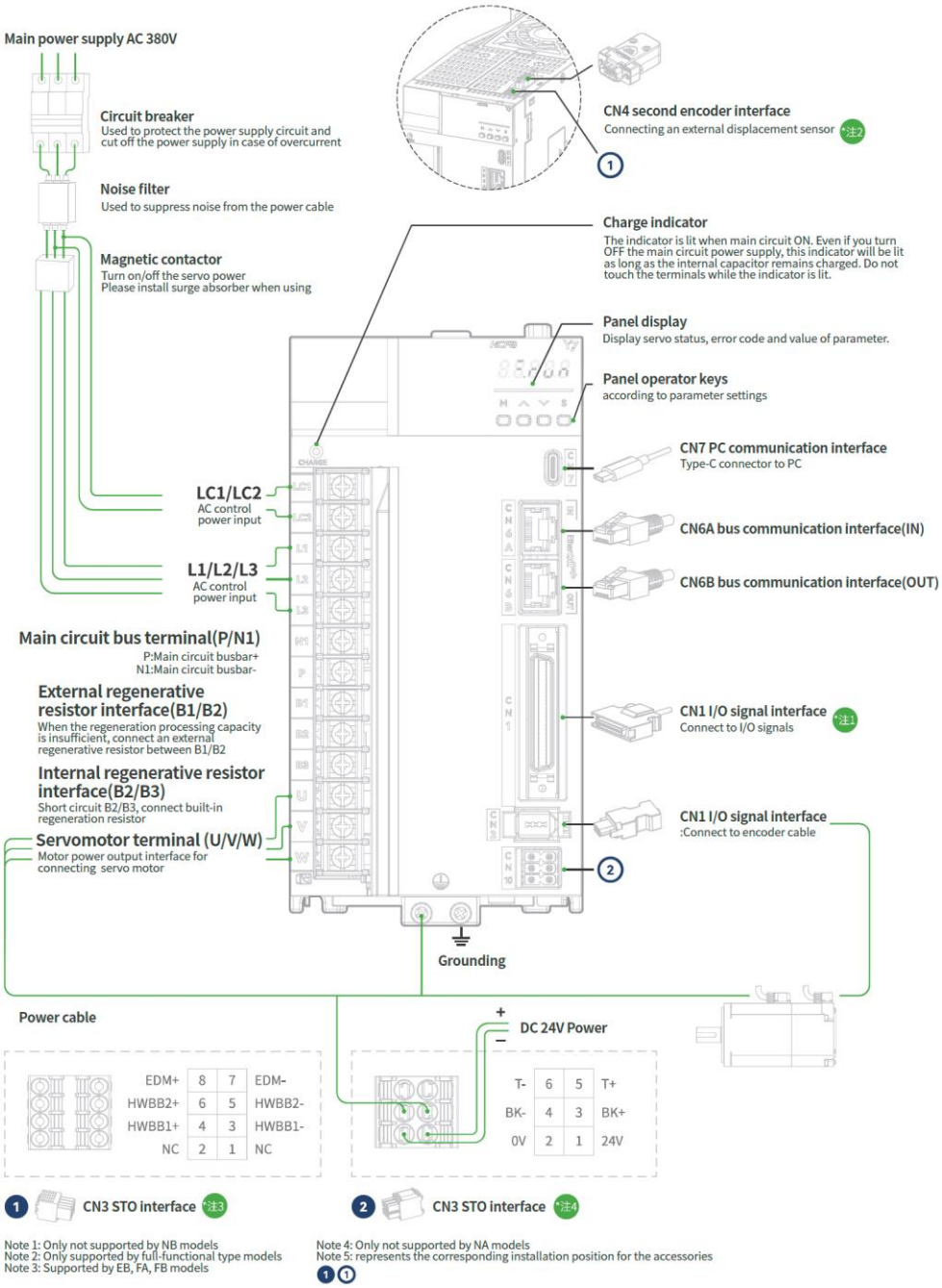

Figure 1-6 Y7S AC380V 5kW Servo Unit Part Name Diagram

1.5.3 380VAC 6kW/7.5kW Servo Drive Part Name Diagram

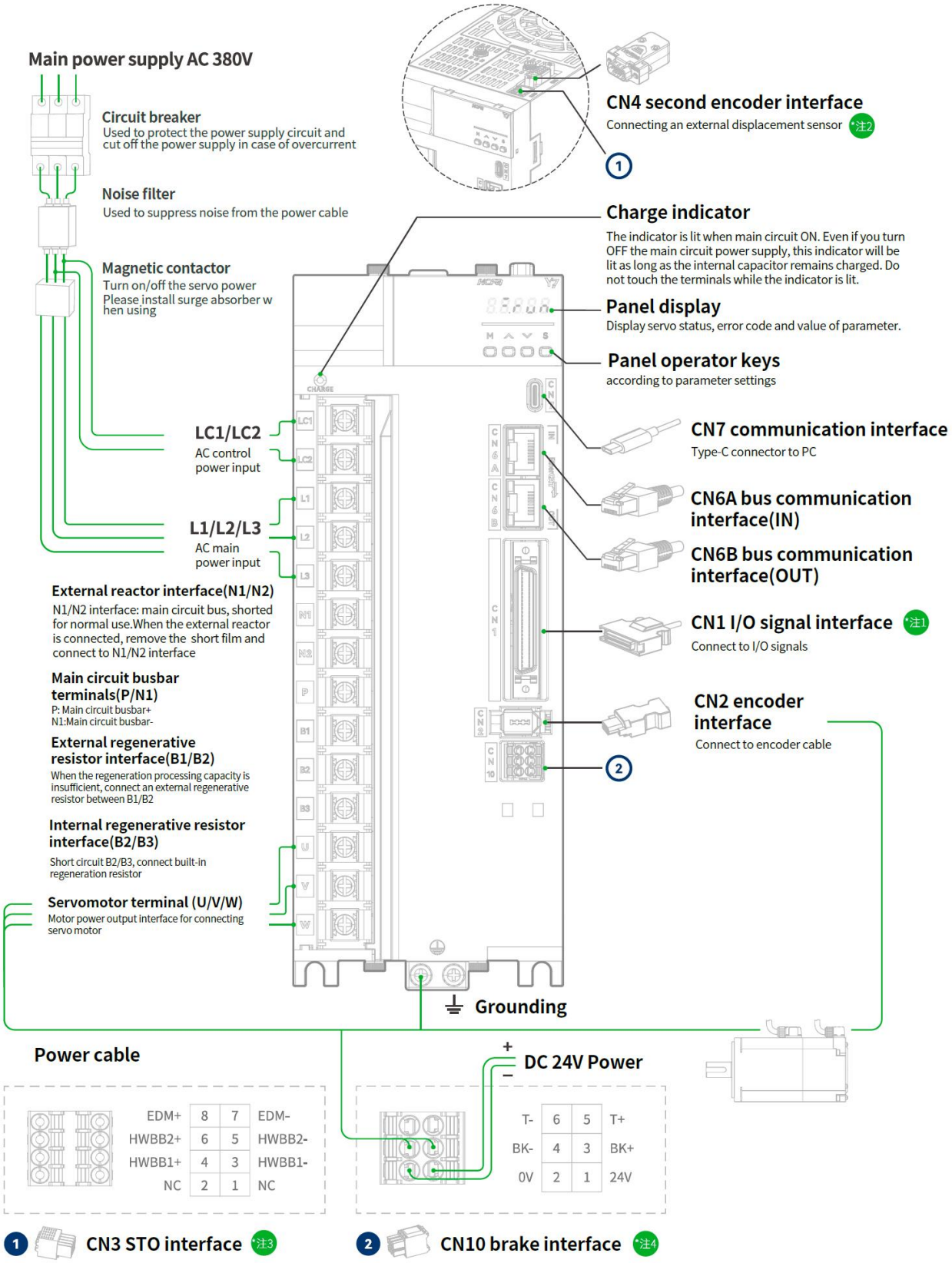

Figure 1-7 380VAC 6kW/7.5kW servo unit introduction diagram of each part

1.5.4 380VAC 11kW/15kW/22kW Servo Drive Part Name Diagram

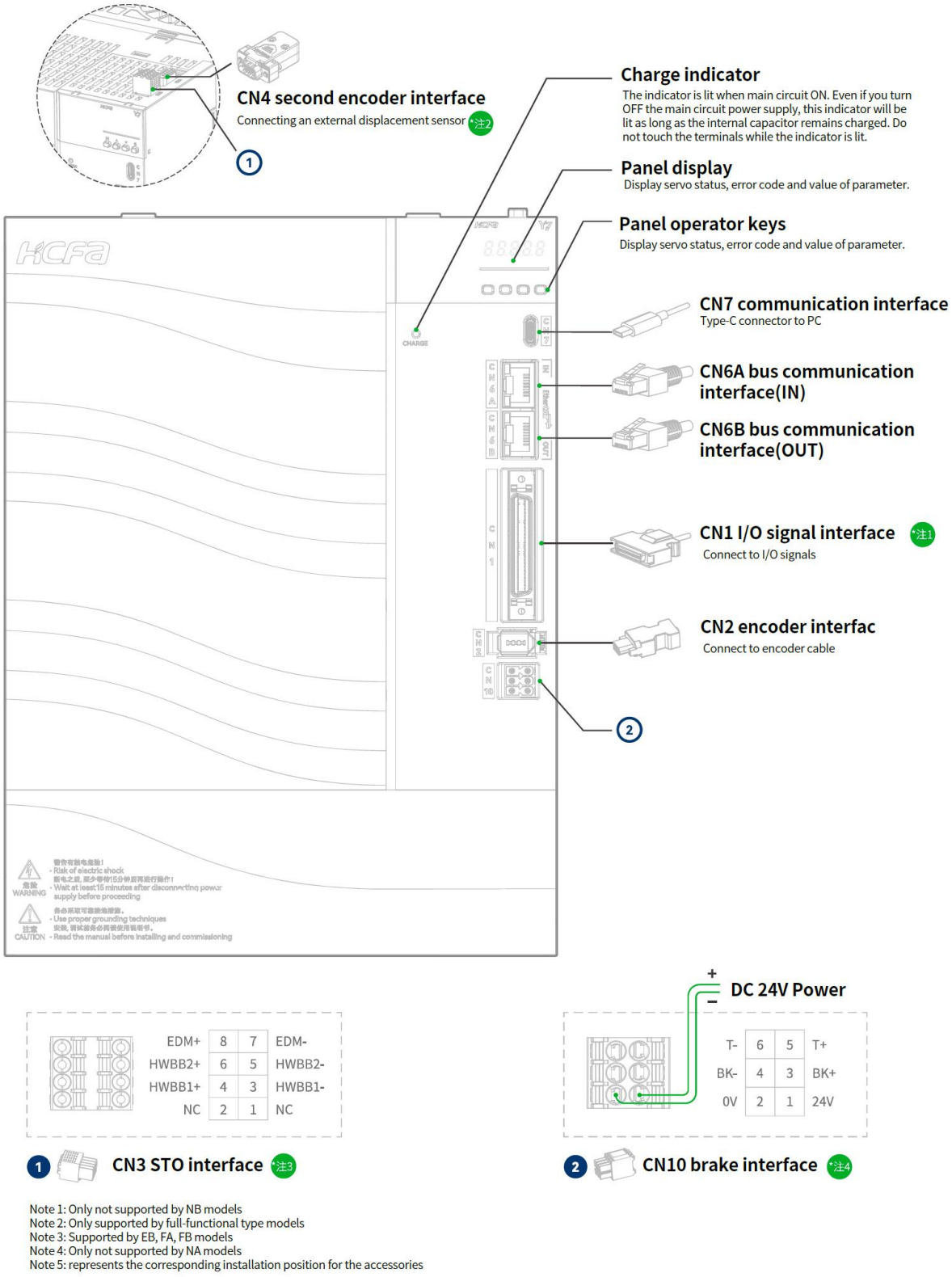

Note 1: Only not supported by NB models
Note 2: Only supported by full-functional type models
Note 3: Supported by EB, FA, FB models
Note 4: Only not supported by NA models
Note 5: represents the corresponding installation position for the accessories

Figure 1-8 380VAC 11kW/15kW/22kW Servo Drive Part Name Diagram

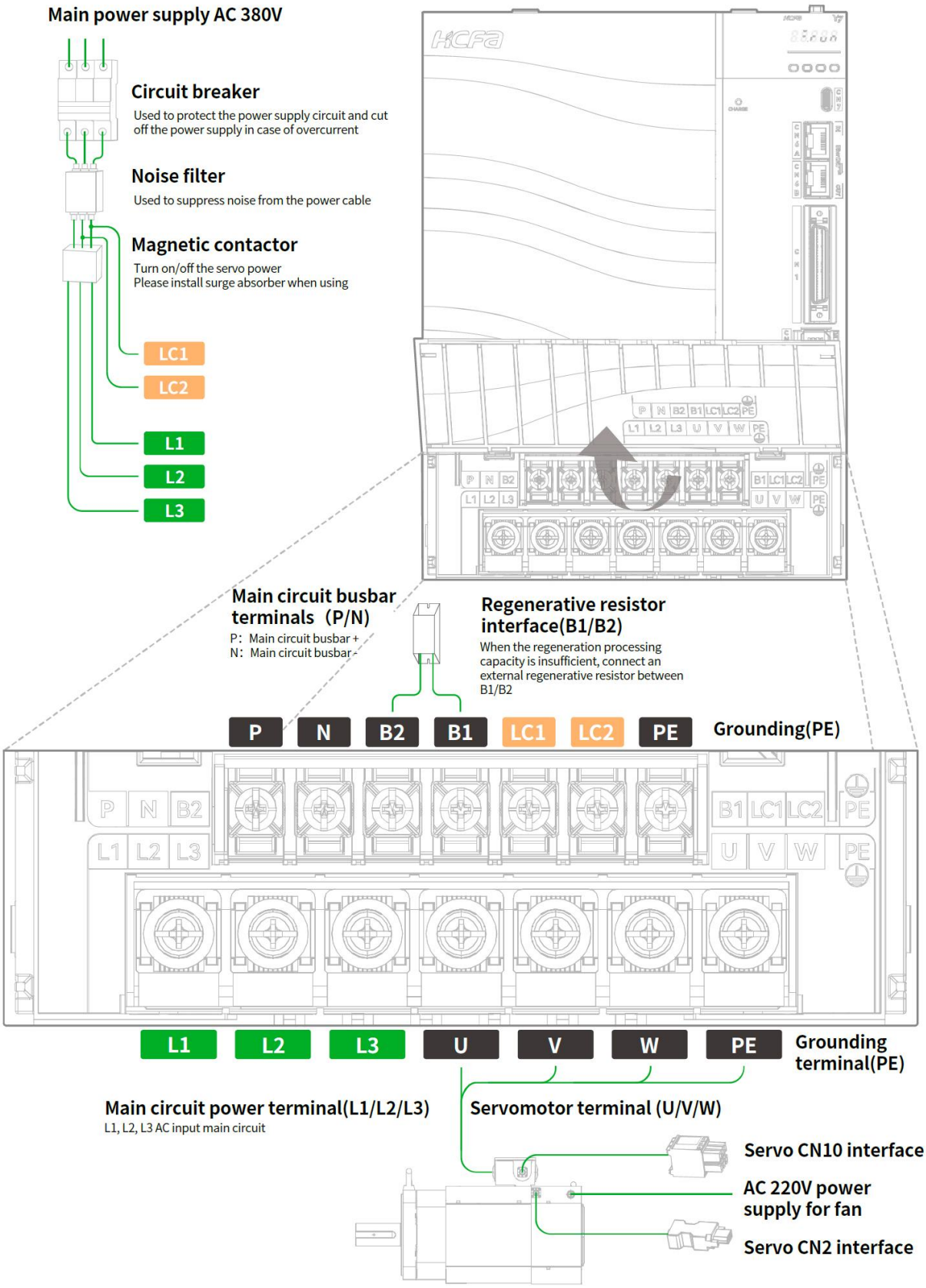

Figure 1-9 380VAC 11kW/15kW/22kW Servo Drive Part Name Diagram

1.6 Y7S Model Specifications

1.6.1 220VAC Servo Drive Specifications

Specifications				
Power (W)	Power Supply	Control power	Pulse type	EtherCAT type
400	Single-phase 220VAC	Common main circuit power	HN-Y7□A040A-S	HN-Y7□B040A-S
750	Single-phase 220VAC	Common main circuit power	HN-Y7□A075A-S	HN-Y7□B075A-S
1000	Single/three-phase 220VAC	Common main circuit power	HN-Y7□A100A-S	HN-Y7□B100A-S
1500	Three-phase 220VAC	Common main circuit power	HN-Y7□A150A-S	HN-Y7□B150A-S
2000	Three-phase 220VAC	Common main circuit power	HN-Y7□A200A-S	HN-Y7□B200A-S

1.6.2 380VAC Servo Drive Specification

Specifications				
Power(W)	Power Supply	Control power	Pulse type	EtherCAT type
1000	Three-phase 380VAC	Common main circuit power	HN-Y7□A100T-S	HN-Y7□B100T-S
1500	Three-phase 380VAC	Common main circuit power	HN-Y7□A150T-S	HN-Y7□B150T-S
2000	Three-phase 380VAC	Common main circuit power	HN-Y7□A200T-S	HN-Y7□B200T-S
3000	Three-phase 380VAC	Common main circuit power	HN-Y7□A300T-S	HN-Y7□B300T-S
5000	Three-phase 380VAC	Single-phase 380VAC	HN-Y7□A500T-S	HN-Y7□B500T-S
6000	Three-phase 380VAC	Single-phase 380VAC	HN-Y7□A600T-S	HN-Y7□B600T-S
7500	Three-phase 380VAC	Single-phase 380VAC	HN-Y7□A750T-S	HN-Y7□B750T-S
11000	Three-phase 380VAC	Single-phase 380VAC	HN-Y7□A111T-S	HN-Y7□B111T-S
15000	Three-phase 380VAC	Single-phase 380VAC	HN-Y7□A151T-S	HN-Y7□B151T-S
22000	Three-phase 380VAC	Single-phase 380VAC	HN-Y7□A221T-S	HN-Y7□B221T-S

Specifications

Function	Pulse full function F type	Pulse standard E type	Pulse general N type	EC bus full function F type	EC bus standard E type	EC bus general N type
STO function	Supported	Not supported	Not supported	Support	Support	Not supported
Fully closed loop	Supported	Not supported	Not supported	Supported	Not supported	Not supported
Built-in holding brake	Supported	Supported	Not supported	Supported	Supported	Supported
Analog input	2 way	2 way	Not supported	2 way	Not supported	Not supported
Analog output	Supported	Supported	Not supported	Supported	Supported	Not supported
First encoder	HCFA protocol BISS-C protocol	HCFA protocol	HCFA protocol	HCFA protocol BISS-C protocol	HCFA protocol	HCFA protocol
I/O	5-way DO 7-way DI	5-way DO 7-way DI	5-way DO 7-way DI	3-way DO 2-way HDO	3-way DO 5-way DI	Not supported

				5-way DI		
Dynamic Braking	Supported	Supported	Not supported	Supported	Supported	Not supported
Pulse divider output	Supported	Supported	Supported	Supported	Not supported	Not supported
RS485	Supported	Supported	Not supported	Not supported	Not supported	Not supported
Bluetooth	Supported	Supported	Not supported	Supported	Supported	Not supported

1.7 Y7S Servo Drive Ratings and Specifications

The servo drive ratings and specifications are shown below.

1.7.1 220VAC Basic Specifications

Items			Specification				
Model HN-Y7□□***A-S** ****			040	075	100	150	200
Maximum applicable motor capacity (kW)			0.4	0.75	1.0	1.5	2.0
Continuous Output Current (Arms)			2.8	5.5	7.6	11.6	15.6
Instantaneous maximum output current (Arms)			9.3	16.9	17	28	39
Main Circuit	Supply Voltage (Vrms)		Single-phase AC220V, 50/60Hz		Three-phase AC220V, 50/60Hz		
	Current (Arms)		2.5	4.1	5.7	7.3	10
Control power			Common main circuit power				
Regenerative resistors	Built-in resistors	Resistance value (Ω)	-	50	50	50	20
		Capacity(W)	-	80	80	100	100
	External minimum allowable resistance value (Ω)		40	40	35	20	20
Overvoltage level			III				

1.7.2 380VAC Basic Specifications

Items			Specification									
Model HN-Y7□□***T-S** ****			100	150	200	300	500	600	750	111	151	221
Maximum applicable motor capacity (kW)			1	1.5	2.0	3.0	5.0	6.0	7.5	11	15	22
Continuous Output Current (Arms)			4.7	5.4	8.4	11.9	16.5	20.8	25.7	28.1	37.2	52
Instantaneous maximum output current (Arms)			16.9	17	24	31	44	52	65	70	88	105
Main Circuit	Supply Voltage (Vrms)		Three-phase AC330 ~ 440V, 50/60Hz									
	Current (Arms)		2.9	4.3	5.8	8.6	14.5	17.4	21.7	23.4	29.6	43.4
Control power			Common main circuit power				Three-phase AC330 ~ 440V, 50/60Hz					
Regenerative resistors	Built-in resistors	Resistance value (Ω)	50	50	50	40	25	20	20	-	-	-
		Capacity(W)	80	80	100	100	100	100	100	-	-	-
	External minimum allowable resistance value (Ω)		40	40	40	35	25	20	20	15	10	10
Overvoltage level			III									

1.7.3 Environmental Specifications

Items	Specification
Ambient temperature	0～+55°C (10% reduction for every 5 degrees of ambient temperature above 45 degrees)
Storage temperature	-20～65°C (maximum temperature guarantee: 80°C 72 hours without condensation)
Ambient humidity for use	20%～85%RH or less (no condensation)
Ambient humidity for storage	20%～85%RH or less (no condensation)
Vibration resistance	5.88m/s^2 (0.6G) or less, 10-60Hz (avoid using at resonance point connection)
Impact resistance	Acceleration 100m/s^2 or less (XYZ)
Protection level	IP20
Cleanliness	- No corrosive gas, combustible gas
	- No water, oil, chemical splash
Altitude	1000m below (1000m ~ 2000m, can be used after reducing the rated value)
Pollution level	2
Overvoltage category	III
Fault short circuit current	5kA
Other	No electrostatic interference, strong electric field, strong magnetic field, radiation, etc.

1.7.4 Technical Specifications

Items			Specification
Control Mode			Position control, speed control, torque control, internal speed control Internal speed control-velocity control, internal speed control-position control, and Internal speed control - Torque control Position Control - Speed Control, Position Control - Torque Control, Torque Control - Speed Control Speed control - Speed control with zero fixing function Position control - Position control with command pulse disable function Fully closed-loop control (supported by full-functional models only)
Position Control	Pulse input	Maximum pulse frequency	Open collector pulse input: frequency not exceeding 200KHz, pulse width not less than 2.5us
			Differential common pulse input: frequency not exceeding 500KHz, pulse width not less than 1us
			Differential high-speed pulse input: frequency not exceeding 4MHz, pulse width not less than 125ns
		Input pulse logic method	Pulse + direction, A-phase + B-phase, CW + CCW
		Electronic gear ratio setting	B/A times
		Command Filters	Acceleration and deceleration filters, moving average filters
	Pulse output	Crossover Ratio	< 16384
		Output pulse pattern	Differential output: A/B/ Z; Collector output: Z signal
Speed Control	Control method		External analog input

	Analog input voltage range		DC±10V (default 6V corresponding to the rated speed can be modified through parameters)
	Torque limiting function		Parameter setting, parameter setting+I/O control, analog input
Internal speed control	Control method		I/O control
	Movement speed selection		Support three different speed switching, set by parameters
Torque control	Control method		External analog input
	Analog input voltage range		DC±10V (default 3V corresponding to the rated speed can be modified through parameters)
	Speed limit function		Parameter setting, parameter setting+I/O control, analog input
General Functions	Control signals	Input/output	7IN/5OUT
	Analog signals	Input/output	2IN (for speed control, torque control)/2OUT (for motor speed, torque monitoring)
	STO security features		Full-featured model support
	Second encoder interface		Full-featured model support
	Inertia self-assumption		Provided
	Parameter free adjustment		Provided
	One-touch adjustment function		Provided
	Friction compensation		Provided
	Vibration suppression frequency band 1		Provided
	Vibration suppression frequency band 2		Provided
	Adaptive trap filter		Provided
	Encoder output frequency division		Provided
	Dynamic Braking		Built-in (general-purpose type without this function)
	Regenerative function		Built-in braking resistor, external higher power braking resistor can be connected
	Protection function		Over voltage, low voltage, phase loss, over current, over temperature alarm, high temperature warning, over load, abnormal encoder, over speed, excessive position deviation, abnormal parameters, etc.
	Communication function	USB	For PC communication (for "HCServoWorks.Y7" connection)
		Industrial Networks	RS485

1.8 External Dimensions for Y7S Servo Drive

1.8.1 Y7S Servo Drive Configuration

	SIZE A	SIZE B	SIZE D
Servo Drives (AC220V)	HN-Y7□□040A-S	HN-Y7□□075A-S HN-Y7□□100A-S	HN-Y7□□150A-S HN-Y7□□200A-S

	SIZE C	SIZE D	SIZE E	SIZE F	SIZE G
Servo Drives (AC380V)	HN-Y7□□100T-S HN-Y7□□150T-S	HN-Y7□□200T-S HN-Y7□□300T-S	HN-Y7□□500T-S	HN-Y7□□600T-S HN-Y7□□750T-S	HN-Y7□□111T-S HN-Y7□□151T-S HN-Y7□□221T-S

Y7S Series Drive Mounting Dimensions

Structure	SIZE A	SIZE B	SIZE C	SIZE D (AC220V)	SIZE D (AC380V)	SIZE E	SIZE F	SIZE G
L(mm)	37.0	47.0	55.0	70.0		90.0	90.0	194.0
H(mm)	172.0	172.0	175.0	175.0		182.8	243.3	260.0
D(mm)	170.0	170.0	180.0	180.0		192.5	205.2	205.0
L1(mm)	21.3	31.3	39.7	54.7		76.0	76.0	Please refer to "High Power Driver Installation Instructions".
L2(mm)	5.5	5.5	5.5	5.5		7.0	7.0	
L3(mm)	5.0	4.5	5.0	5.0		6.0	6.0	
H1(mm)	162.8	162.8	163.0	163.0		168.0	227.5	
Aperture(ϕ)	5.5	5.5	5.5	5.5		6.0	6.0	
Screw holes	2-M5	2-M5	2-M5	2-M5		3-M5	4-M5	
Locking torque(Nm)	3.5N-M	3.5N-M	3.5N-M	3.5N-M		3.5N-M	3.5N-M	
Weight(kg)	0.76	1.01	1.21	1.45	1.5	2.2	3.6	8.77

1.8.2 SIZE A Servo Drive External Dimension Drawing

Weight(KG)
0.76

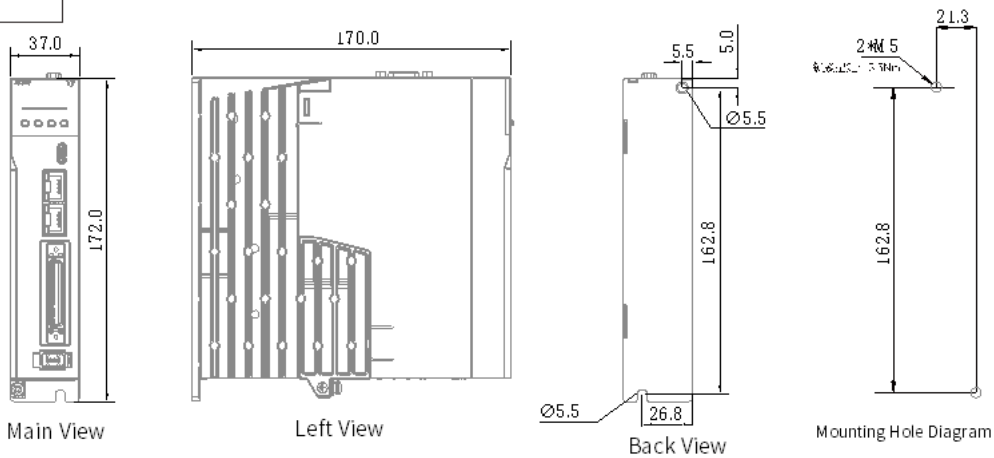

1.8.3 SIZE B Servo Drive External Dimension Drawing

Weight (KG)
1.01

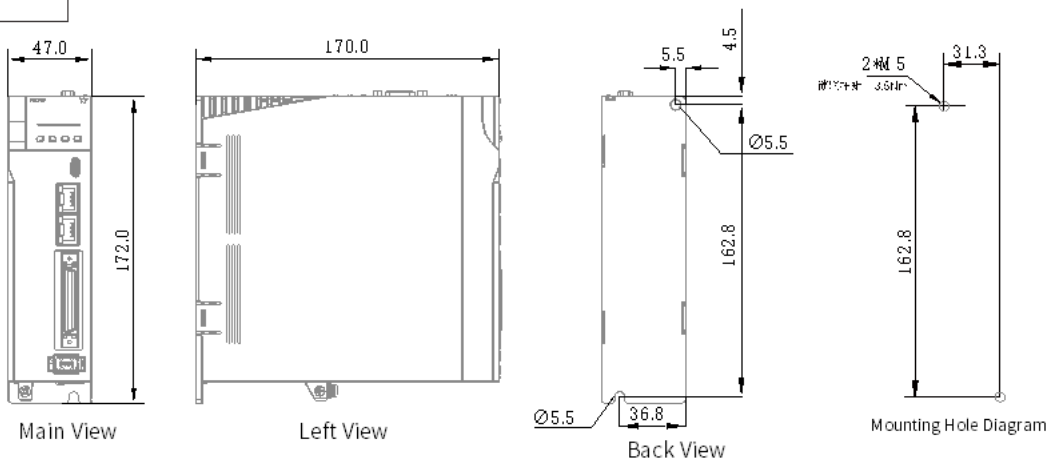

1.8.4 SIZE C Servo Drive External Dimension Drawing

Weight (KG)
1.21

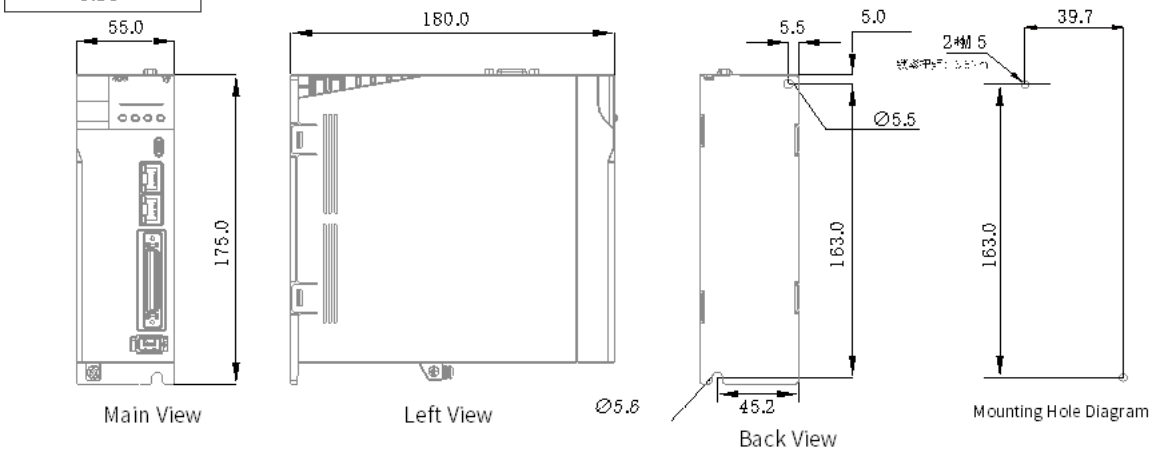

1.8.5 SIZE D Servo Drive External Dimension Drawing

Weight (KG)	
1.45	1.5

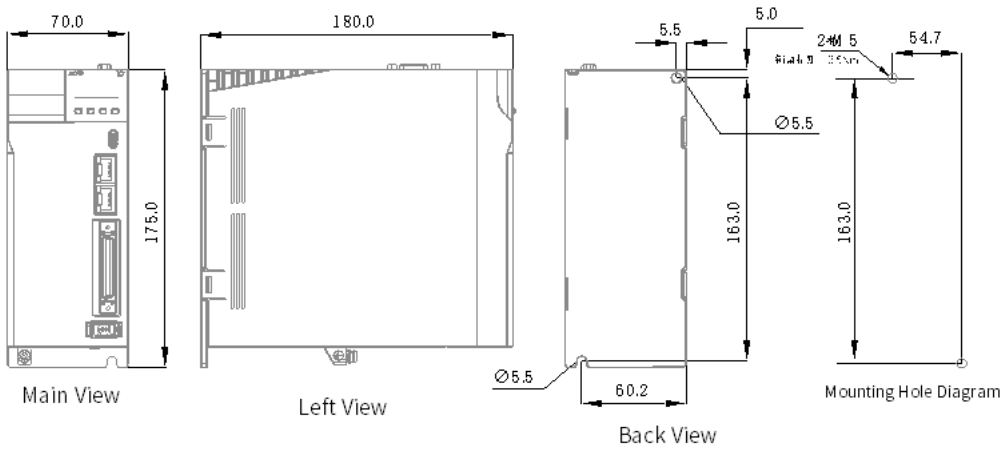

1.8.6 SIZE EServo Drive External Dimension Drawing

Weight(KG)
2.2

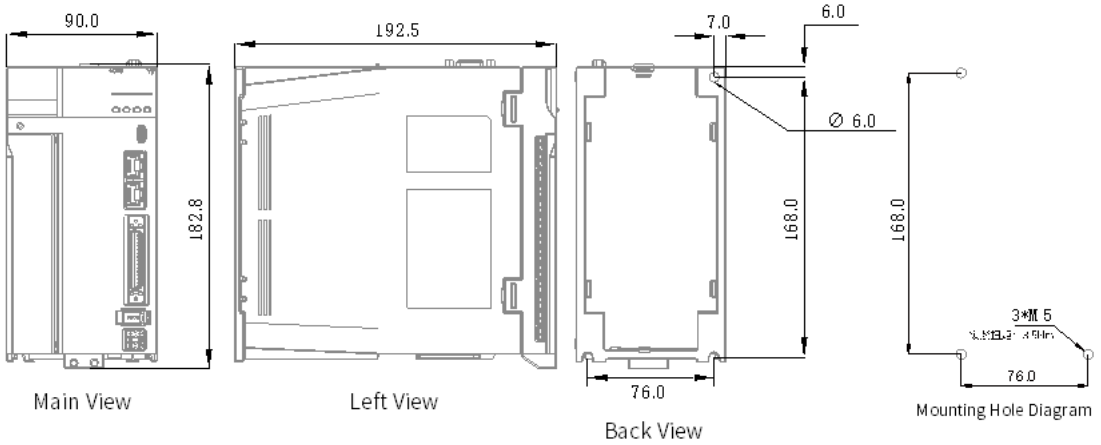

1.8.7 SIZE F Servo Drive External Dimension Drawing

Weight(KG)
3.6

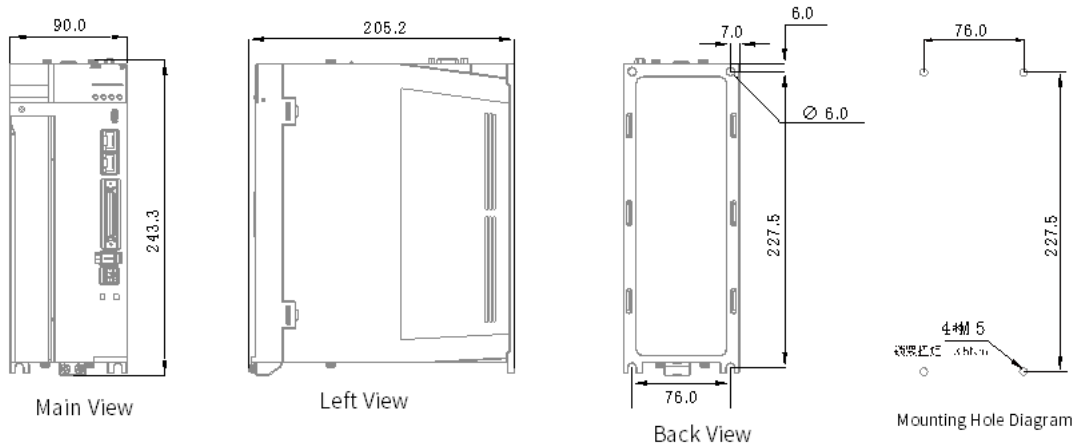

1.8.8 SIZE G Servo Drive External Dimension Drawing

Weight(KG)
8.77

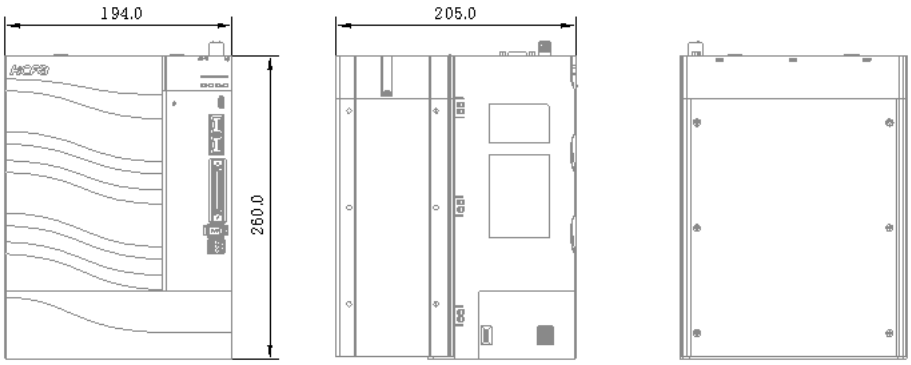

Main View Left View Back View

1.9 Installation

1.9.1 Installation Instructions in Control Panel

Cautions

- When installing the servo unit, do not seal its suction and vent holes or place it upside down, otherwise it will cause malfunction.
- In order to get a relatively low air resistance for the cooling fan to effectively dissipate heat, please follow the recommended installation interval distance when installing one or more drives.
- Please avoid the top and bottom rows, because the heat generated by the lower row of the drive rises during operation and tends to cause unnecessary temperature increase in the upper row of the drive.

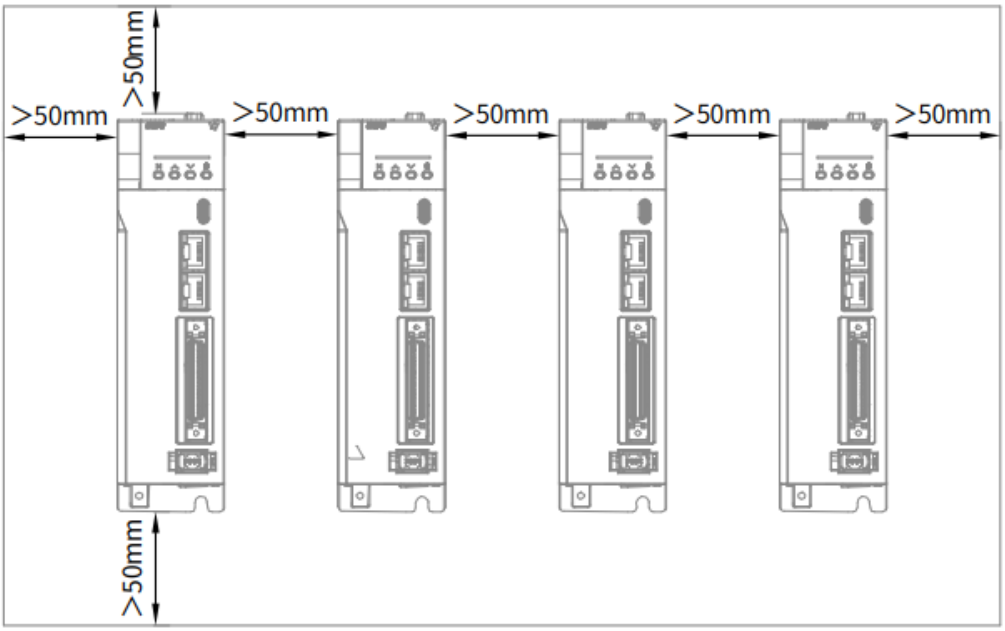

Figure 1-10 Y7S Servo Unit Installation Diagram

1.9.2 Structural Installation Instructions

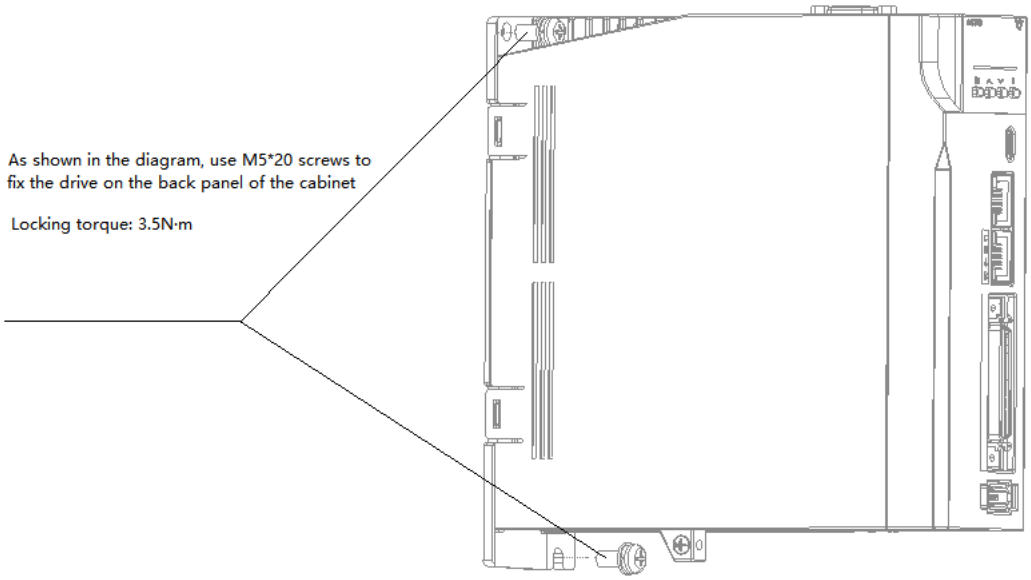

Figure 1-11 Y7S Servo Unit Installation Diagram

1.9.3 High Power Drive Installation Instructions

Users can choose to use base-mounted or rack-mounted installation according to the needs of the equipment.

Base-mounted

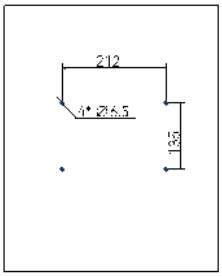

Step1

Make four Φ6.5 holes in the back panel of the electrical cabinet, the specific dimensions are shown in the figure

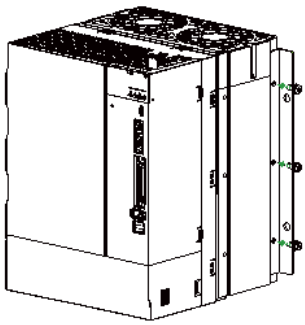

Step2

Take out the mounting bracket and six M5*12 screws from the package, fix the mounting bracket on both sides of the drive with screws, as shownin the figure

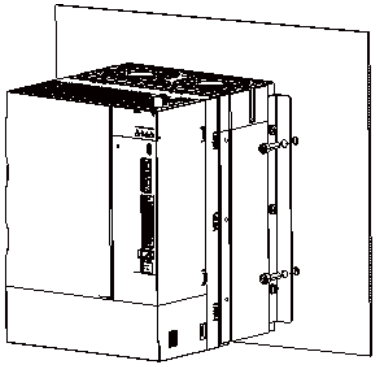

Step3

Use M6 socket head cap screws to fix the drive to the back panel of the cabinet and ensure that it issecure with recommended locking torque of 3N · m

Figure 1-11 Y7S Servo Unit Installation Diagram

Rack-mounted.

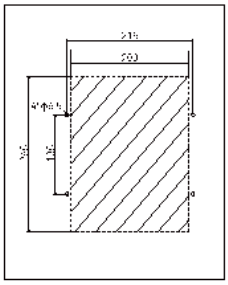

Step1

Make four Φ6.5 holes in the back panel of the electrical cabinet and remove the shaded area with the specific dimensions shown in the figure

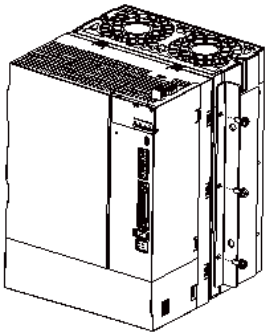

Step 2

Take out the mounting bracket and six M5*12 screws from the package, fix the mounting bracket on both sides of the drive with screws, as shown in the figure

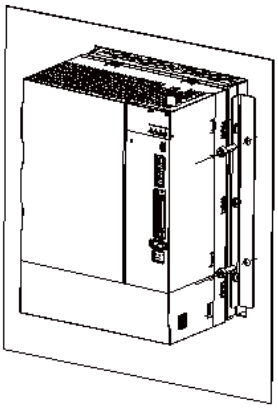

Step3

Push drive into the hole, and use M6 socket head cap screws to fix the drive to the back panel of the cabinet and ensure it is secure with recommended locking torque of 3N-m

1.10 Maintenance and Inspection

The following explains the maintenance and inspection of the servo unit.

Inspection of servo motor

The servo unit does not require daily inspection, but the following items need to be inspected at least once a year or more.

Inspection items	Inspection interval	Inspection essentials	Handling in case of failure
Check the appearance	At least 1 time per year	No garbage, dust, oil stains, etc.	Please wipe with cloth or clean with air gun
Loose screws		Terminal blocks, connector mounting screws, etc. must not be loose	Please tighten further

Chapter 2 Wiring and Connection

Chapter 2 Wiring and Connection 23

2.1 Precautions 25

2.1.1 Symbols 25

2.1.2 General Wiring Precautions 25

2.2 Connector Type Terminal Definition Diagram 28

2.3 Fence Type Terminal Definition Diagram 30

2.4 Main circuit wiring 32

2.4.1 Example of Main Circuit Wiring for Standard AC220V Power Input 33

2.4.2 Example of Main Circuit Wiring for Standard AC380V Power Input 34

2.4.3 Servo Unit of Single-phase 220V Power Input 36

2.4.4 Servo Unit of DC Power Input 37

2.4.5 Line Breaker and Fuse Capacity 41

2.5 Wiring of regenerative resistor 42

2.5.1 AC 220 V Regenerative Resistor 43

2.5.2 AC380V regenerative resistor basic specifications 43

2.6 Input and output signals (CN1) 44

2.6.1 Pin Arrangement of I/O Signal (CN1) Connector 45

2.6.2 Name and Function of Input Signal (CN1) 46

2.6.3 Input Signal AlPositions 47

2.6.4 Input Circuit 49

2.6.5 Name and Function of Output Signal (CN1) 51

2.6.6 Output Signals AlPositions 51
2.6.7 Output Circuit 54
2.6.8 PG Output 54
2.6.9 Analog Input 55
2.6.10 Brake Signal 55
2.7 Encoder Signal (CN2) 56
2.7.1 Name and Function of Encoder Signal (CN2) 56
2.7.2 Wiring the Servo Unit to Encoder 57
2.8 Safety Function Signals STO(CN3) 59
2.8.1 Names and Functions of the Safety Function Signal (CN3) 59
2.8.2 Safety Input Circuit 61
2.8.3 Safety Output Circuit 61
2.8.4 Output Signal (EDM1 Signal) Specifications 62
2.8.5 Example of Wiring for Safety Terminals 62
2.9 The Second Encoder Interface CN4) 63
2.10 Communication Connector (CN6) 64
2.11 Brake Input Connection (CN10) 65
2.11.1 Brake wiring 65
2.12 Standard Wiring Diagram in Position/Speed/Torque Control Mode 67
2.12.1 Connection Example for Position Control (Pulse type) 67
2.12.2 Connection Example for Speed Control (Pulse type) 68
2.12.3 Connection Example for Torque Control (Pulse type) 69
2.13 Noise and Harmonic countermeasures 70
2.13.1 Countermeasures against Noise 70
2.13.2 Noise Filter Wiring and Connection Precautions 72
2.13.3 Connection of Reactor for Harmonic Suppression 75

2.1 Precautions

2.1.1 Symbols

Table 2-1 Precaution Symbols

name	Function
Danger	Indicates hazards that may cause death or serious injury
Attention	Indicates precautions that may cause injury or property damage"
	Indicates the mandatory content that must be implemented

2.1.2 General Wiring Precautions

Points

Please use a circuit breaker or fuse for wiring to protect the main circuit.

- The servo unit is directly connected to the industrial frequency power supply without using a transformer for insulation. In order to prevent accidents of mixed contact between the servo system and the outside, be sure to use a circuit breaker or fuse for wiring.
- Please install an earth leakage circuit breaker. The servo unit does not have a built-in ground short-circuit protection circuit. In order to build a safer system, install an earth leakage circuit breaker for both overload and short circuit protection, or combine it with a circuit breaker for wiring and install an earth leakage circuit breaker for ground short circuit protection。
- Please avoid turning ON/OFF power frequently
- Frequently turn ON/OFF power will cause elements in servo drive to deteriorate, so do not use it for applications that require to turn ON/OFF power frequently.
- After you have started actual operation(normal operation), allow at least one hour between turning the power supply ON and OFF.

To ensure safety, stable application of the servo system, please observe the following precautions when wiring.

Use the cables specified by HCFA and arrange the system so that each cable is as short as possible.

- Use twisted-pair wires or multi-core twisted-pair shielded wires for I/O signal cables and encoder cables.
- The wiring length of the input and output signal cables is up to 3m, and the length of the main circuit cable of the servo motor and the encoder cable is up to 10m each.

Observe the following precautions when wiring the ground cable.

- Use a ground cable as thick as possible (2.0 mm^2 or more).
- Please ground 220V servo unit to a resistance of 100Ω or less, and ground 380V servo unit with a resistance of 10Ω or less.
- Be sure to ground at one point only
- Ground the servo motor directly if the servo motor is insulated from the machine.

The signal cable conductors are as thin as 0.2 mm2 or 0.3 mm2. Do not subject them to excessive bending stress or tension

Wiring points:

※ The control circuit power supply and the main circuit power supply should be wired from the same AC220V main power supply.

※ When the user I/O cable is longer than 50cm, please use twisted pair with shielded wire.

※ Encoder cable length is 20m or less.

Note:1. There is high voltage in the circuit in the solid line. Be careful when wiring and handling.

2. The dotted part of the wiring diagram indicates a non-hazardous voltage circuit.

This section also explains the general precautions when wiring and the precautions in special use environments.

Table 2-2 Precautions for Special Use Environment

Projects	Description
External machine configuration	In order to comply with European EC standards, after selecting a machine with applicable specifications, please set it according to the system diagram.
Environment	The driver is installed in an environment of pollution degree 2 or pollution degree 1 specified in IEC60664-1.
Power supply 1 : AC200 ~ 240V (main circuit and control circuit power supply)	This product is used in an overvoltage category II power supply environment in accordance with IEC60664-1.
Power supply 2: DC24V • I/O power • Release the power supply of the motor brake	the DC24V external power supply must meet the following conditions: Use SELV power supply (※), the capacity is below 150W (this is the condition when corresponding to European CE); Safe low voltage/non-hazardous voltage, hazardous voltage require reinforced insulation (Attention).
Wiring	Motor power cables, AC220V input cables, FG cables, and main circuit power distribution cables composed of multiple axes: Please use AWG18 / 600V withstand voltage wires below 750W , and use AWG14 / 600V withstand voltage wires above 1kW .
Leakage circuit breakers	To protect the power line, the circuit is cut off when an overcurrent flows. Between the power supply and the noise filter, be sure to use an IEC standard and UL-approved circuit breaker. To comply with EMC standards, please use a standard circuit brake with leakage detection function.
Noise filter	Prevent noise interference from power lines (Use standard noise filtering for EMC compliance).
Electromagnetic contactor	Switch (ON/OFF) the main power supply (please use it with a surge protector connected).
surge absorber	To comply with EMC regulations, please use standard surge absorbers.
Signal Line Noise Filter / Ferrite Core	To comply with EMC standards, please use standard noise filters.

Regenerative resistor	If the smoothing capacitor inside the power unit cannot sufficiently absorb and process regenerative power, it is necessary to install a regenerative resistor outside. For reference, check the setting panel for regenerative discharge status, and use a regenerative resistor when regenerative voltage warning occurs. Regenerative resistor reference specification: Please refer to external braking resistor selection. Use the built-in thermostat, and set the overheat protection circuit.
Grounding	Our products have protection settings because they are suitable for Class 1 equipment. The grounding of our products requires protective ground terminal, and is carried out through a protective box and an electrical box that have implemented EMC countermeasures. The protective ground terminal is indicated by the standard FG mark .

Note: ※ SELV: safety extra low voltage .

2.2 Connector-Type Terminal Definition Diagram

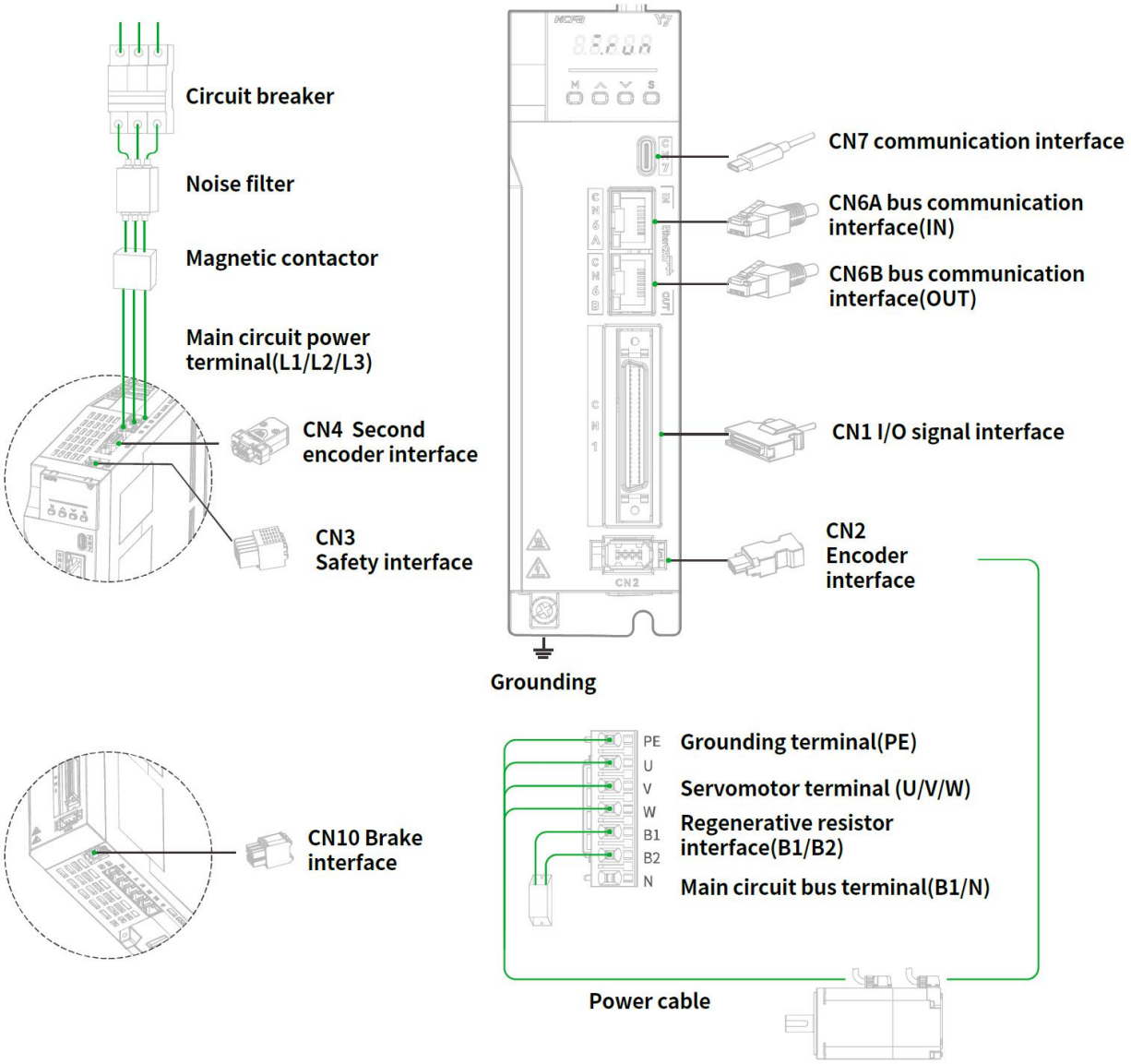

Figure 2-1 Connector Type Terminal Drive Wiring Diagram

Table 2-3 Terminal Symbols and Terminal Names for Connector Type

Terminal name	Terminal symbols	Signal name/ pin number	content			
Regenerative resistor	B1/B2	B1	External regenerative resistor interface , main circuit bus+			
		B2	External regenerative resistor interface			
Main circuit bus	N	N	Main circuit bus-			
AC main circuit power input	L1/L2/L3	L1	220V model: three-phase 200-240V (50/60Hz) 380V model: three-phase 380~440V (50/60Hz) Note: Please confirm the drive power specification when wiring			
		L2				
		L 3				
Motor power output	U/V/W	u	Motor power U phase output			
		V	Motor power V-phase output			
		W	Motor power W phase output			
Encoder	CN2	1	Encoder power supply 5V output			
		2	Signal Ground			
		3	—			
		4	—			
		5	Encoder signal: serial data +			
		6	Encoder signal: serial data-			
		Case	The shield wire is connected to the connector shell			
Communication	CN6A/CN6B	-	RS485			
User I/O	CN1	Refer to 2.6 Input and output signal (CN1) wiring details				
Second encoder	CN4	1	+ 5V output, current output ≤ 300 mA			
		2	0 V output			
		3	Hall U +			
		4	Hall U -			
		5	Hall V +			
		6	Incremental encoder A -	B ISS-C CLK-	Sine Encoder Sin -	Serial DATA-
		7	Incremental encoder B-	B ISS-C DATA-	Sine Encoder Cos -	-
		8	Incremental encoder Z -			
		9	Hall W +			
		1 0	Hall V -			
		1 1	Incremental encoder A +	B ISS-C CLK+	Sine encoder Sin +	Serial DATA+
		1 2	Incremental encoder B+	B ISS-C DATA+	Sine encoder C os +	-
		1 3	Incremental encoder Z +			
		1 4	Hall W -			
		1 5	temperature sensor signal			
Brake and temperature detection	C N10	1	Brake + 24V power supply			
		2	Brake 0 V			
		3	B K+			
		4	BK-			
		5	N TC+			
		6	N TC-			
Ground terminal	⏚	Connect to the ground terminal of the power supply and the servo motor for grounding.				

➢ Note: Do not short-circuit B1/B2, the servo unit may be damaged .

2.3 Fence-Type Terminal Definition Diagram

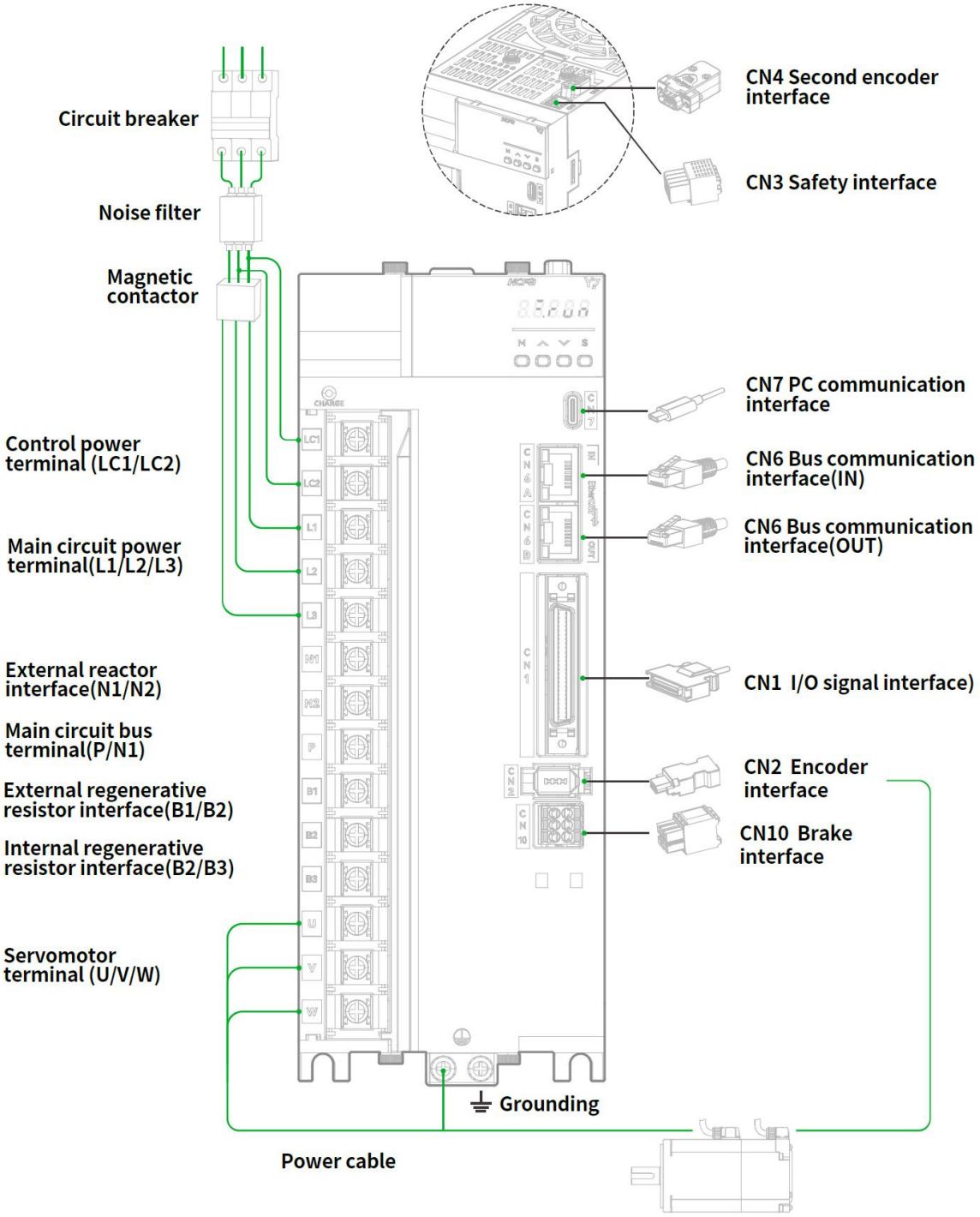

Figure 2-2 Fence Type Terminal Drive Wiring Diagram

Table 2-4 Terminal Symbols and Terminal Names for Fence Type

name	mark	Signal name	content			
Regenerative resistor	B1/B2/B3	B1	External regenerative resistor interface , main circuit bus+			
		B2	External regenerative resistor interface			
		B 3	Built-in regenerative resistor interface			
main circuit bus	N 1/N2/P	N 1	Main circuit bus-			
		N 2	Main circuit bus - (only available for models with a power of 7.5Kw)			
		P	Main circuit bus+			
AC control power input	LC1/ LC2	LC1	380V model: 380~440V (50/60Hz) Note: Please confirm the drive power specification when wiring			
		LC2				
AC main circuit power input	L1/L2/L3	L1	380V model: three-phase 380~440V (50/60Hz) Note: Please confirm the drive power specification when wiring			
		L2				
		L 3				
Motor power output	U/V/W	u	Motor power U phase output			
		V	Motor power V-phase output			
		W	Motor power W phase output			
Encoder	CN2	VCC	Encoder power supply 5V output			
		GND	Signal ground			
		—	—			
		—	—			
		D +	Encoder signal: serial data +			
		D- _	Encoder signal: serial data-			
		FG	The shield wire is connected to the connector shell			
Communication	CN6A/CN6B	-	RS485			
User I/O	CN1	Refer to 2.6 Input and output signal (CN1) wiring details				
Second encoder	CN4	1	+ 5V output, current output ≤ 300 mA			
		2	0 V output			
		3	Hall U +			
		4	Hall U -			
		5	Hall V +			
		6	Incremental encoder A-	BISS-C CLK-	Sine encoder Sin -	Serial DATA-
		7	Incremental encoder B-	BISS-C DATA-	Sine encoder encoder Cos-	-
		8	Incremental encoder Z -			
		9	Hall W +			
		1 0	Hall V -			
		1 1	Incremental encoder A +	BISS-C CLK+	Sine encoder Sin +	Serial DATA+
		1 2	Incremental encoder B+	BISS-C DATA+	Sine encoder Cos +	-
		1 3	Incremental encoder Z +			

		1 4	Hall W -
		1 5	Temperature sensor signal
Brake And temperature detection	C N10	1	Brake + 24V power supply
		2	Brake 0 V
		3	B K+
		4	BK-
		5	N TC+
		6	N TC-
Ground terminal	⏚	Connect to the ground terminal of the power supply and the servo motor for grounding.	

2.4 Main Circuit Wiring

When turning on the power, please consider the following points.

Please ensure the following design when the power is turned on: After outputting the signal of "servo alarm", turn OFF the main circuit power supply.

- When the control power supply is turned on, the ALM signal is output (relay: OFF) for up to 5.0 seconds. Please take it into consideration when designing the power-on sequence , and turn off the main circuit power connected to the servo unit through the relay.

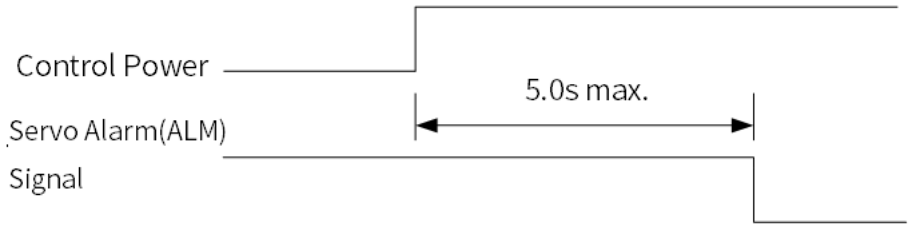

Figure 2-3 Servo Alarm Signal Timing Chart

- Make sure that the power supply specifications are suitable for the input power supply.

Points

- Turn ON the control power supply before the main circuit power supply or turn ON the control power supply and the main circuit power supply at the same time. Turn OFF the main circuit power supply first, and then turn OFF the control power supply.

2.4.1 Example of Main Circuit Wiring for Standard 220VAC Power Input

Model name: HN- Y7□□040A-S , HN-Y7□□ 75A-S , HN- Y7□□100A-S , HN- Y7□□150A-S , HN- Y7□□200A- S

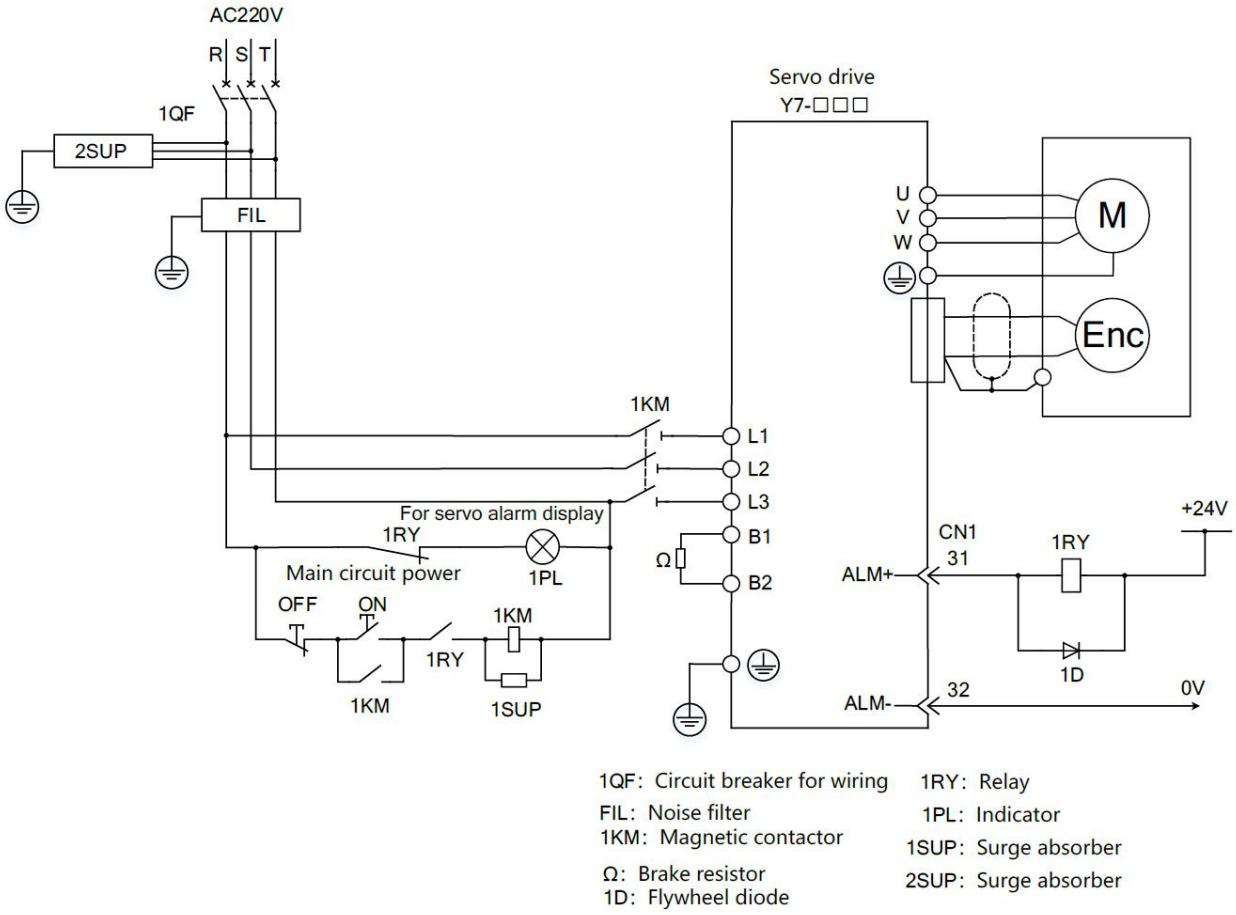

Figure 2-4 Three-phase 220V Wiring

2.4.2 Example of Main Circuit Wiring for Standard 380VAC Power Input

Model name: HN - Y7DD100T - S , HN - Y7DD150T - S , HN - Y7DD200T - S , HN - Y7DD300T - S

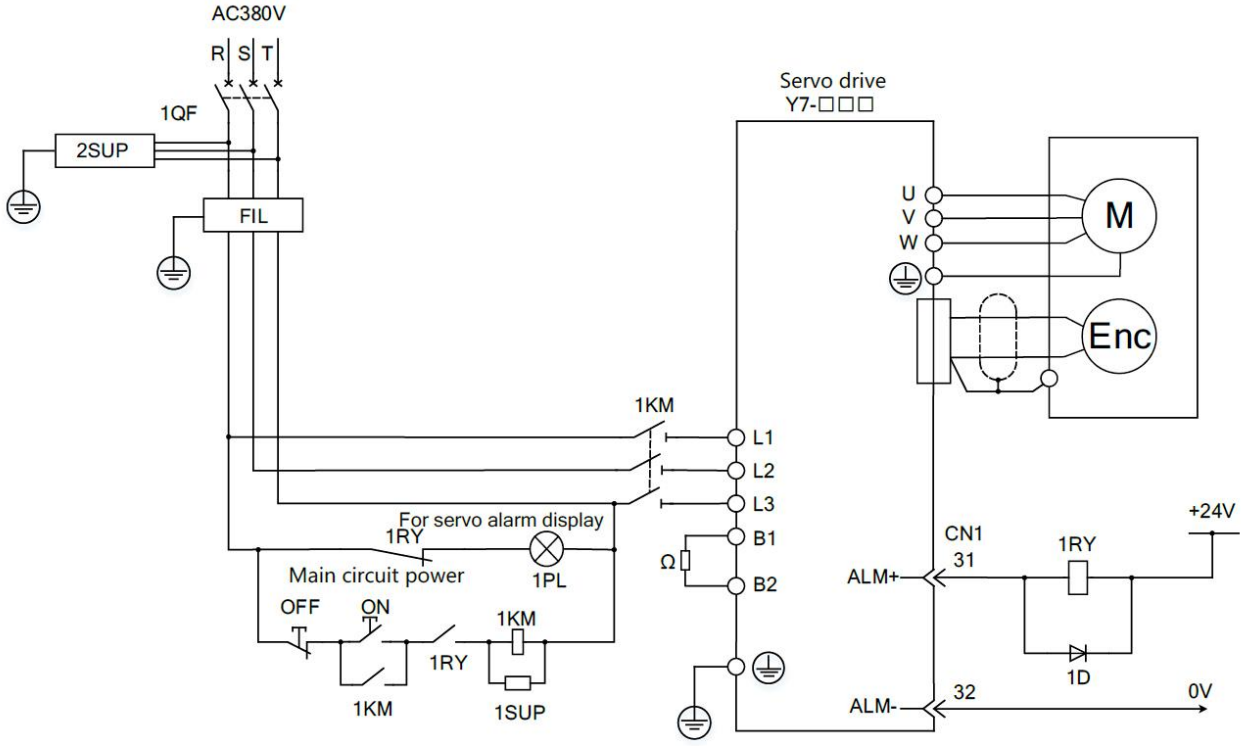

1QF: Circuit breaker for wiring
FIL: Noise filter
1KM: Magnetic contactor
Ω: Brake resistor
1D: Flywheel diode
1RY: Relay
1PL: Indicator
1SUP: Surge absorber
2SUP: Surge absorber

Model: HN- Y7□□500T-S, HN- Y7□□600T-S , HN-Y7□□750T-S , HN- Y7□□111T-S , HN-Y7□□151T-S , HN- Y 7□□221T-S

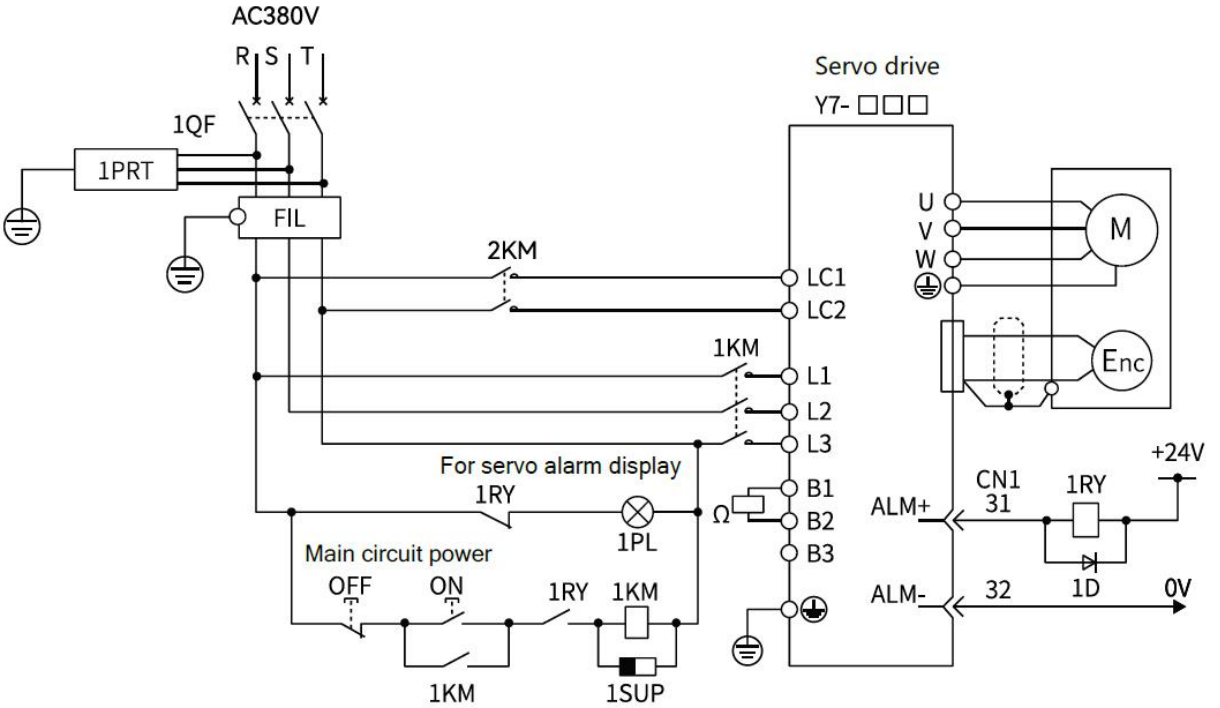

1QF: Circuit breaker for wiring

FIL: Noise filter

1KM: Magnetic contactor

Ω : Brake resistor

(Connect to B1/B2 when using an external resistor)

(Short circuit B2/B3 when using internal brake resistor)

1RY: Relay

1PL: Indicator

1PRT: Surge absorber (Absorbing lightning surges)

1D: Flywheel diode

1SUP: Surge absorber

Figure 2-5 Three-phase 380V Wiring

2.4.3 Servo Drive of Single-phase 220V Power Input

The Y7S series 220V power supply input type servo unit has a three-phase power input specification, and there are also models that can be used under a single-phase 220V power supply. When using the main circuit power supply of the above servo unit under the single-phase 220V power supply, please change it to Pn00B.2=1 (support single-phase power input).

1) Parameter setting for single-phase power input

Table 2-5 Parameter Setting for Single-phase Power Input

Parameter		Meaning	When Enabled	Classification
Pn00B	n. □ 0 □□ [Default setting]	Use with three-phase power input	After restart	Setup
	n. □ 1 □□	Use with single-phase power input		

Please observe the following precautions when using.

⚠ Danger

·When using a servo unit that supports single-phase 220V power input, if you directly input single-phase power without changing the parameter setting to Pn00B.2=1 (supporting single-phase power input), a power phase loss alarm (A.F10) will be detected.

·Single-phase power input is not supported, except for servo units that are suitable for single-phase 220V power input. Otherwise power phase loss alarm (A.F10) will be detected.

·When using single-phase 220V power input, the torque/speed characteristics of the servo motor sometimes cannot meet the characteristics of three-phase power input

2) Main circuit power input

When the power supply is single-phase 220V, please connect it to the L1 and L2 terminals. The power specifications other than the main circuit power input are the same as three-phase power input.

Table 2-6 Main Circuit Power Input Terminal

Terminal	Name	function, rating
L1, L2	Main circuit power input terminal	Single-phase 200V～240V (50/60Hz)
L3	—	none

Note: Do not connect to L3 terminal .

3) Wiring example for single-phase 220V power input

Model: HN-Y7□□040A-S, HN-Y7□□075A-S

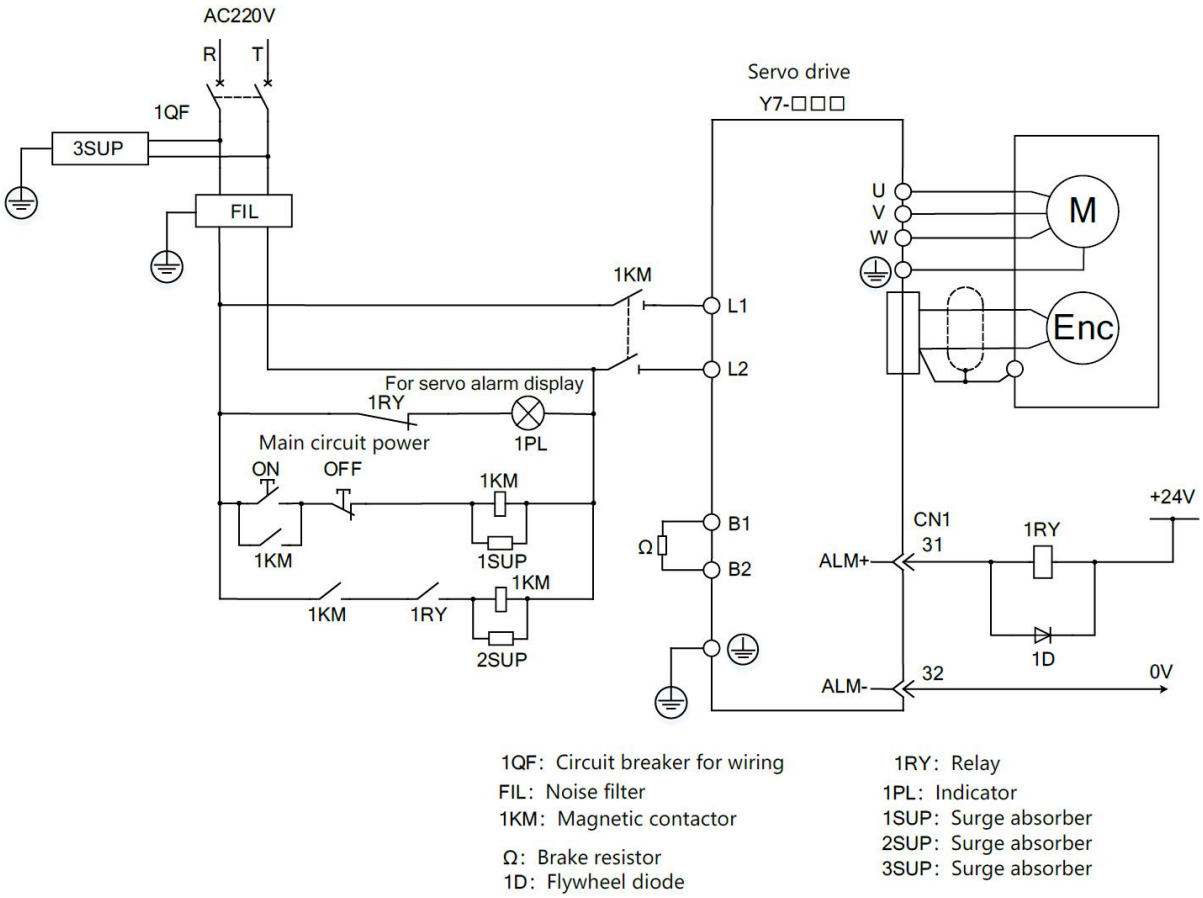

Figure 2-6 Signal-phase 220V Wiring

2.4.4 DC Power Input

1) Parameter setting for DC power input

Before using the servo unit with DC power input, be sure to change the parameter to Pn001.2 =1 (support DC power input)

Table 2-7 DC Power Supply Settings

Parameter		Meaning	When Enabled	Classification
Pn001	n. □0□□	Use with AC power input	After restart	Setup
	n. □1□□	Use with DC power input		

Please observe the following precautions when using.

⚠ Danger

· Both 220V and 380V servo unit support AC/DC power input. Please ensure to set Pn001.2=1(Support DC power input) before inputting the power supply·

· Otherwise it will cause the elements in servo unit to burn out and result in fire or device damage.

· Even after you turn OFF the power supply, a high residual voltage may still remain in the servo unit. To prevent electric shock, do not touch the power supply terminals after you turn OFF the power. Make sure to discharge after the power is cut off·

· Please install a fuse on the power wiring when DC power is input

· The servo motor returns regenerative energy to the power supply. If you use a servo unit with a DC power supply input, regenerative energy is not processed. Process the regenerative energy at the power supply.

· If you use a DC power supply input, externally connect an inrush current limiting circuit. Otherwise will cause damage to the servo unit.

2) Main circuit and control power input

① Three-phase 220V

Model: HN-Y7□□040A-S , HN-Y7□□075A-S , HN-Y7□□100A-S , HN-Y7□□150A-S , HN-Y7□□200A-S

Table 2-8 220VDC Power Input Terminals

Terminal	Name	Specification
B1	Main circuit positive side terminal	DC280～360V
N	Main circuit negative side terminal	0V

②Three-phase 380V

Model: HN-Y7□□100T-S , HN- Y7□□150T-S , HN-Y7□□200T-S , HN-Y7□□300T-S

Table 2-9 380VDC Power Input Terminals

Terminal	Name	Specification
B1	Main circuit positive side terminal	480～620V DC
N	Main circuit negative side terminal	0V

③Three-phase 380V

Model: HN-Y7□□500T-S , HN-Y7□□600T-S , HN-Y7□□750T-S , HN-Y7□□111T-S , HN-Y7□□151T-S , HN-Y7□□221T-S

Table 2-10 380VDC Power Input Terminals

Terminal	Name	Specification
P	Main circuit positive side terminal	480～620VDC
N1 (N2 is a model with a power of 7.5 kw)	Main circuit negative side terminal	0V
LC1 , LC2	Control power terminal	480～620VDC

3) Wiring example for DC power input

① Wiring for HN-Y7□□□□□A-S DC310V power input type servo unit

Model: HN-Y7□□040A-S , HN-Y7□□075A-S , HN-Y7□□100A-S , HN-Y7□□150A-S , HN-Y7□□200A-S

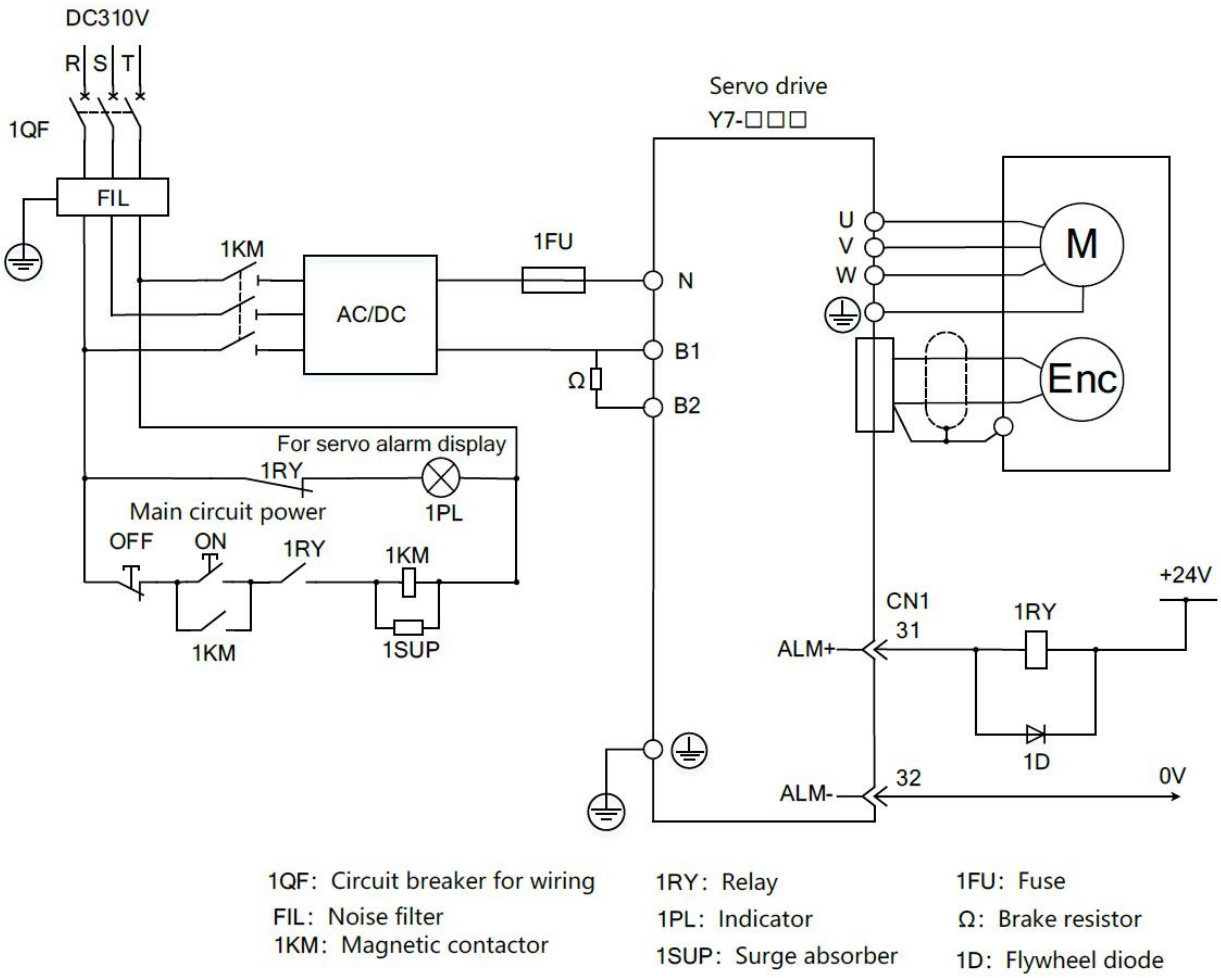

Figure 2-7 DC310V Input HN-Y7□□□□□A-S Wiring

Note: The terminals are different according to the model of the servo unit. Please refer to the table in "(2) Main circuit, control power input" .

② Wiring 1 of HN-Y7□□□□T-S DC540V power input type servo unit

Model: HN-Y7□□100T-S, HN-Y7□□150T-S, HN-Y7□□200T-S, HN-Y7□□300T-S

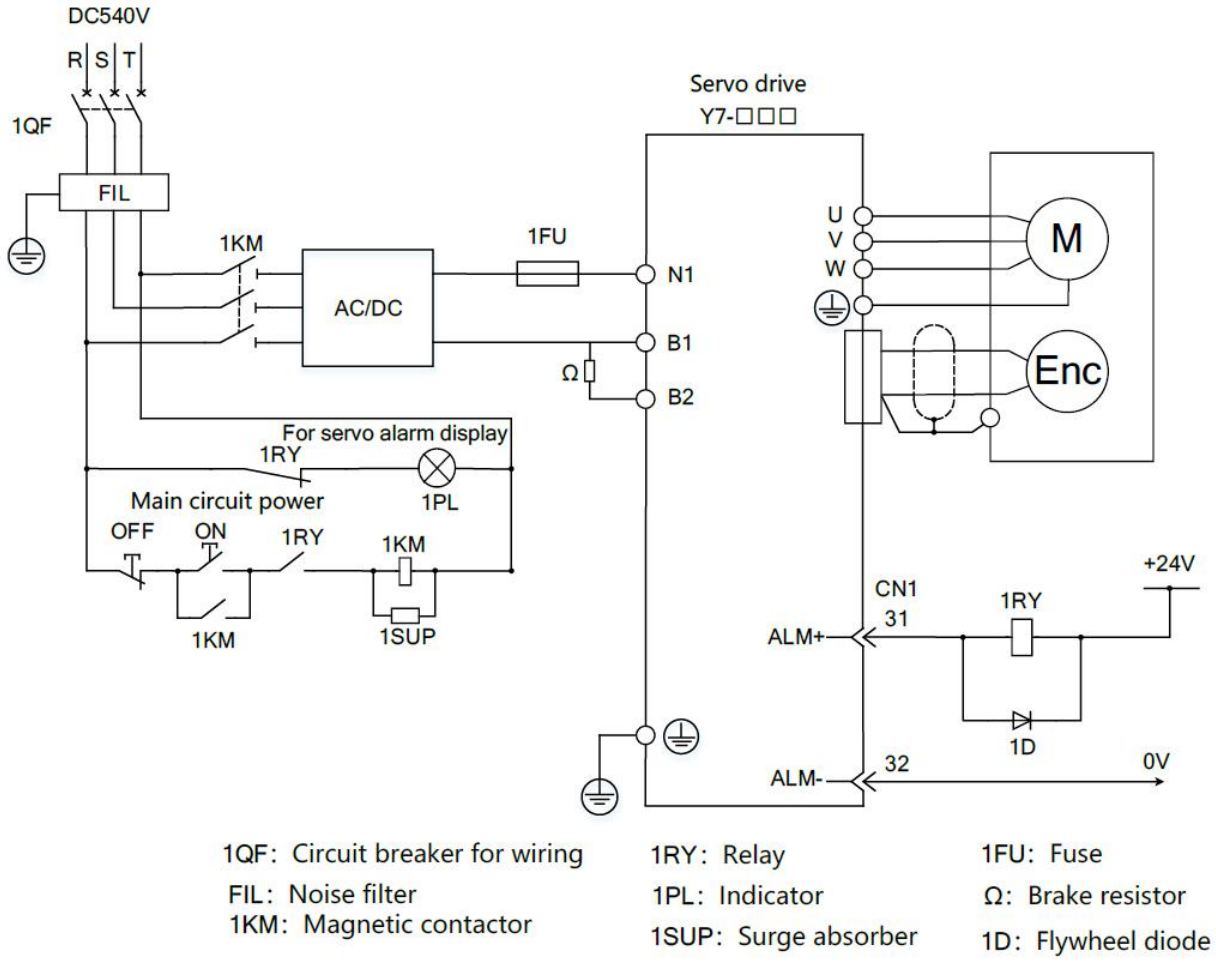

Figure 2-8-1 DC540V Input HN-Y7□□□□□T-S Three-phase Wiring

③ Wiring 2 of HN-Y7□□□□T-S DC540V power input type servo unit

Model: HN-Y7□□500T-S, HN-Y7□□600T-S, HN-Y7□□750T-S, HN-Y7□□111T-S, HN-Y7□□151T-S, HN-Y7□□221T-S

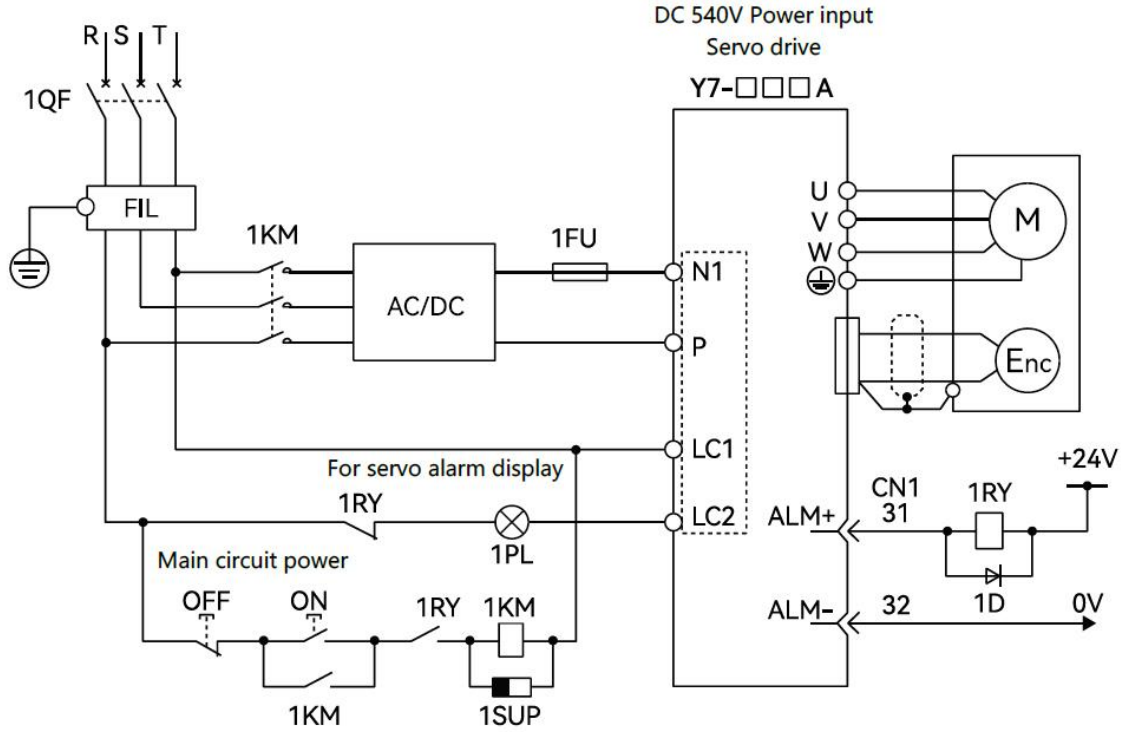

1QF: Circuit breaker for wiring
FIL: Noise filter
1KM: Magnetic contactor
1RY: Relay
1PL: Indicator
1PRT: Surge absorber (Absorbing lightning surges)
1D: Flywheel diode
1SUP: Surge absorber (Absorbing switching surges)

Figure 2-9 DC540V Input HN-Y7□□□□□T-S Three-phase Wiring Diagram

2.4.5 Circuit Breaker and Fuse Capacity

Table 2-11 Circuit Breaker and Fuse Capacity Table for Wiring

Main circuit power supply	Maximum applicable motor capacity [kW]	Servo unit model Y7-	Power supply capacity for single servo unit kVA	Current capacity		Impulse current	
				Main circuit Arms	Control loop Arms	Main circuit A0-p	Control loop A0-p
Single-phase 220V	0.4	040	1.2	5.0	Same as main circuit	33.0	Same as main circuit
	0.75	075	1.9	9.0			
Three-phase 220V	1.0	100	2.3	6.0			
	1.5	150	3.2	7.3			
	2	200	4	9.7			
Three phase 380V	1.0	100	2.3	2.9		15	
	1.5	150	3.5	4.3		24	

	2.0	200	4.5	5.8		34	
	3.0	300	7.1	8.6		44	
	5.0	500	11.7	14.5	1.4	57	—
	6.0	600	12.4	17.4	1.5	34	
	7.5	750	14.4	21.7			
	11	111	21.9	23.4	1.7	6 8	
	15	151	30.6	29.6			
	22	221	45.5	43.4			

Note: 1. In order to meet the low voltage standard, please be sure to connect a fuse on the input side for protection when a fault is caused by a short circuit. Please select the fuse or circuit breaker for the input side to meet the UL standard products. In addition, the current capacity and inrush current in the above table are net values . Please select a fuse and a circuit breaker for wiring that satisfy the following conditions for breaking characteristics .

2. Main circuit and control circuit: When the current value is 3 times the value in the above table, the circuit shall not be disconnected within 5s .

Table 2-12 Restrictions to Comply with UL Standard

Servo Unit Y7--□□□A	Usage restrictions
150A, 200A , 300A	Rated current value of circuit breaker for wiring: 40A or less .
600T 750T	The rated current value of circuit breaker for wiring: 6 0A or less. The rated current value of fast-acting fuse and time-delay fuse: below 6 0A . The rated current value of the time-delay fuse: below 3 5A .
111T 151T	The rated current value of circuit breaker for wiring: 80A or less. The rated current value of fast-acting fuse and time-delay fuse: below 125A . The rated current value of the time-delay fuse: 75A or less.

2.5 Wiring of regenerative resistor

When the processing capacity of regenerative energy is insufficient, connect an external regenerative resistor according to the following method, and set the regenerative resistor capacity (Pn600) for details .

Note: Please connect the regenerative resistor unit correctly. Do not short-circuit B1/B2. Doing so may result in damage to the regenerative resistor or the servo unit and cause fire.

Generally, directly connect regenerative resistor between B1/B2 terminals. In the power range of servo unit above 200 A/ 100T, an external regenerative resistor can be connected to the B1/B2 terminal of the servo unit only when the terminal B2/B3 of the servo unit is open circuited (the wiring is removed). After connecting, please set the regenerative resistor capacity.

When connecting with servo units such as H N-Y7□□□□□AS, the unit with the model HN -Y7□□040A-S does not have a built-in regenerative resistor. If the processing capacity of regenerative energy is insufficient, an external regenerative resistor must be connected .

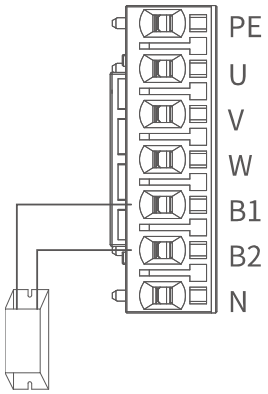

Figure 2-9 Model Below 3kw Regenerative Resistor Wiring

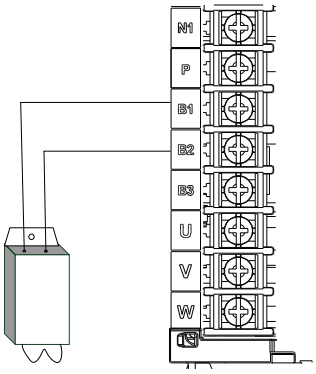

Figure 2-10 Model Above 5kw Regenerative Resistor Wiring (With B3)

2.5.1 220 VAC Regenerative Resistor

Table 2-13 220VAC Regenerative Resistor Specifications

Item			Specification				
Model HN-Y7E B ***A- S ** ****			040	075	100	150	200
Regenerative resistor	Built-in resistor	Resistance value (Ω)	—	50	50	50	20
		Capacity (W)	—	40	80	100	100
	External minimum allowable resistance value (Ω)		40	40	35	20	20

2.5.2 380VAC regenerative resistor basic specifications

Table 2-14 380VAC Regenerative Resistor Specifications

Item			Specification									
Model HN-Y7E B *** T - S ** ****			100	150	200	300	500	600	750	111	1 51	2 21
Regenerative resistor	Built-in resistor	Resistance value (Ω)	50	50	50	40	25	20	20	—	—	—
		Capacity (W)	80	80	100	100	100	100	100	—	—	—
	External minimum allowable resistance value (Ω)		40	40	40	3 5	25	20	15	15	10	1 0

Points

- If using an external regenerative resistor at a normal rated load factor, the temperature of the resistor reaches 200℃ to 300℃, please be sure to derate before using it. For the load characteristics of the resistor, please consult the manufacturer
- To ensure safety, recommend to use external regenerative resister with temperature-controlled switch.

2.6 Input and Output Signals (CN1)

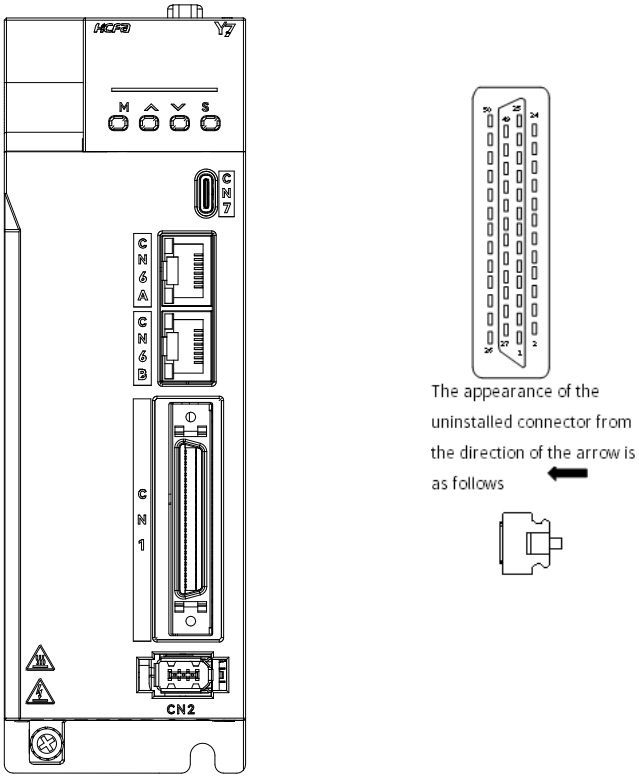

Figure 2-11 CN1 External View

2.6.1 Pin Arrangement of I/O Signal (CN1) Connector

2	SG	GND
4	SEN	SEN signal input-
6	SG	GND
8	/ PULS	Pulse Reference Input
10	SG	GND
12	/ SIGN _	Sign of Reference Input
14	CLR	Position Deviation Clear input Input
16	CC-P 5V	5V External Power Supply for Open Collector Reference Output
18	PL3	12V Internal Power Supply for OpenCollector Reference
20	/PCO	Divided Pulse Output, Phase C phase
22	Null	Null
24	CC-D 24V	24V for open collector command

1	SG	GND
3	PL1	12V Internal Power Supply for Open Collector Reference Output
5	V-REF	Analog Speed Reference Input
7	PULS	Pulse Reference Input
9	T-REF	Analog Torque Reference Input
11	SIGN	Sign of Reference Input
13	PL2	12V Internal Power Supply for Open Collector Reference Output
15	Null	Null
17	CC-D 5V	5V External Power Supply for Open Collector Reference Output
19	PCO	Encoder Divided Pulse Output, Phase C
21	Null	Null
23	CC-P 24V	24V External Power Supply for Open Collector Reference Output
25	/V-CMP- (/COIN+)	Speed Consistency Detection Output

27	/TGON+	Rotation Detection Output
29	/S-RDY+	Servo Ready Detection Output
31	ALM+	Servo Alarm Output
33	PAO	Encoder Divided Pulse Output, Phase A
35	PBO	Encoder Divided Pulse Output, Phase B
37	OUT5+	Output Signal
39	DAC0	Analog Output 1
41	/P-CON	P Action Input
43	N-OT	Disabled Reverse Side Drive Input
45	/P-CL	Forward Side External Torque Limit Input
47	DI (COM)	External 24V Power Input
49	OCZ	Z Signal Collector Output

26	/V-CMP- (/COIN-)	Speed Consistency Detection Output
28	/TGON-	Rotation Detection Output
30	/S-RDY-	Servo Ready Detection output
32	ALM-	Servo Alarm Output
34	/PAO	Encoder Divided Pulse Output, Phase A
36	/PBO	Encoder Divided Pulse Output, Phase B
38	OUT5+	Output Signal
40	/S-ON	Servo ON Input
42	P-OT	Disabled Forward Side Drive Input
44	/ALM-RST	Alarm Reset Input
46	/N-CL	Reverse Side External Torque Limit Input
48	DAC1	Analog Output 2
50	TH	External Temperature Detection

Figure 2-12 Pin Arrangement of I/O Signal (CN1) Connector

Note: General-purpose N type is not equipped with analog input and analog output

2.6.2 Name and Function of Input Signal (CN1)

Table 2-15 Input Signal (CN1) Name and Function List

Control Method	Signal	Pin No.	Function	
Any Control Method	/S-ON	40	Control the servo motor power 0N/0FF	
	/P-CON	41	According to the parameter setting, the following functions are allocated.	
			Proportional Control Reference	When the signal is ON, the speed control loop is controlled from PI (proportional and integral)to P (proportional) control.
			Direction of Rotation Reference	Switches the rotation direction of the motor when internal set speed control is selected .
			Control Mode Switching	In the form of "position - speed", "position - torque" and "torque - speed".
			Speed control with zero clamping	When the speed control with zero clamping function is selected, the speed command will be regarded as zero when the signal is 0N .
			Position control with command pulse inhibition function	When the position control with command pulse inhibition function is selected, the input of command pulse will be inhibited when the signal is 0N.
	P-OT N-OT	42 43	Prohibition of forward drive Prohibition of reverse drive	When the mechanical movement exceeds the movable range, the drive of the servo motor is stopped (overtravel prevention function).
	/P-CL /N-CL	45 46	According to the parameter setting, the following functions are allocated.	
			Forward External Torque Limit Input Reverse External Torque Limit Input	The torque limit function is valid when the signal is ON.
	/ALM-RST	44	Alarm clear	
	DI (COM)	47	**(Note)Available when the control power supply is used for the input signal.** Operable voltage range: +11V ～ +25V (+24V power supply is not provided by HCFA) .	
	SEN	4(2)	Inputs the position data request signal for an absolute encoder.	
Speed Control	V-REF	5(6)	Input speed reference, maximum input voltage: ±10V .	
Position	PULS /PULS SIGN /SIGN	7 8 11 12	One of the following input pulse forms is set. • Sign + pulse train • CW + CCW pulse trains • 90° phase-differential pulses	
	CLR /CLR	15 14	Clears the position deviation during position control.	
Torque	T-REF	9 (10)	Inputs the torque reference. Maximum input voltage: ±10V .	

Note: 1.Pin numbers in parentheses ( ) indicate signal grounds (SG).

2. The input signal distribution of P-0T, N-0T and probe is changeable , please refer to 2.6.3 "Input Signal Distribution" for details .

2.6.3 Input Signal Assignments

Points

- If you change the default polarity settings for the /S-ON (Servo ON), P-OT (Forward Drive Prohibit), or N-OT (Reverse Drive Prohibit) signal, the main circuit power supply will not be turned OFF and the overtravel function will not operate if there are signal line disconnections or other problems. If you must change the polarity of one of these signals, verify operation and make sure that no safety problems will exist.
- If you allocate two or more signals to the same input circuit, a logical OR of the inputs will be used and all of the allocated signals will operate accordingly. This may result in unexpected operation.

After changing the distribution of the input signal, please be sure to set Pn50A.0 = 1 when using it, so that the servo is in a state where the distribution can be changed.

The state of the input signal can be confirmed through the input signal monitoring (Un005)

Table 2-16 Input Signal Distribution

Signal Name	Active level	input signal	CN1 pin number							no connection required (Processed inside the servo unit)	
Parameter Assignment			40	41	42	43	44	45	46	always valid	always invalid
Servo ON Setting of Pn50A.1	L	/S-ON	0	1	2	3	4	5	6	7	8
	h	S-ON	9	A	B	C	D.	E.	f		
Proportional Control Setting of Pn50A2	L	/P-CON	0	1	2	3	4	5	6	7	8
	h	P-CON	9	A	B	C	D.	E.	f		
Forward Drive Prohibit Setting of Pn50A.3	h	P-OT	0	1	2	3	4	5	6	7	8
	L	/P-OT	9	A	B	C	D.	E.	f		
Reverse Drive Prohibit Setting of Pn50B.0	h	N-OT	0	1	2	3	4	5	6	7	8
	L	/N-OT	9	A	B	C	D.	E.	f		
Alarm Reset Setting of Pn50B.1	L	ARM-RST	0	1	2	3	4	5	6	-	8
	h	/ARM-RST	9	A	B	C	D.	E.	f		
Forward External Torque Limit Setting of Pn50B.2	L	/P-CL	0	1	2	3	4	5	6	7	8
	h	P-CL	9	A	B	C	D.	E.	f		
Reverse External Torque Limit Setting of Pn50B.3	L	/N-CL	0	1	2	3	4	5	6	7	8
	h	N-CL	9	A	B	C	D.	E.	f		
Motor Direction Switching Setting of Pn50C.0	L	/SPD-D	0	1	2	3	4	5	6	7	8
	h	SPD-D	9	A	B	C	D.	E.	f		
Internal Set Speed Selection Setting of Pn50C.1	L	/SPD-A	0	1	2	3	4	5	6	7	8
	h	SPD-A	9	A	B	C	D.	E.	f		
Internal Set Speed Selection Setting of Pn50C.2	L	/SPD-B	0	1	2	3	4	5	6	7	8
	h	SPD-B	9	A	B	C	D.	E.	f		
Control Selection Setting of Pn50C.3	L	/C-SEL	0	1	2	3	4	5	6	7	8
	h	C-SEL	9	A	B	C	D.	E.	f		
Zero Clamping Setting of Pn50D.0	L	/ZCLAMP	0	1	2	3	4	5	6	7	8
	h	ZCLAMP	9	A	B	C	D.	E.	f		
Reference Pulse Inhibit Setting of Pn50D.1	L	/INHIBIT	0	1	2	3	4	5	6	7	8
	h	INHIBIT	9	A	B	C	D.	E.	f		
Gain Selection Setting of Pn50D.2	L	/G-SEL	0	1	2	3	4	5	6	7	8
	h	G-SEL	9	A	B	C	D.	E.	f		
Reference Pulse Input Multiplication Switch Setting of Pn515.1	L	/PSEL	0	1	2	3	4	5	6	7	8

Note: If you allocate two or more signals to the same input circuit, a logical OR of the inputs will be used and all of the allocated signals will operate accordingly. This may result in unexpected operation.

2.6.4 Input Circuit

The following describes terminals 40 to 47 of the CN1 port .

1) Relay/Collector Input Circuit

The connection is made via a relay or an open-collector transistor circuit. When using a relay connection, please choose a relay for small current; if you do not use a relay for small current, it will cause poor contact .

Example of Relay Circuit	Example of Common Colletor Circuit
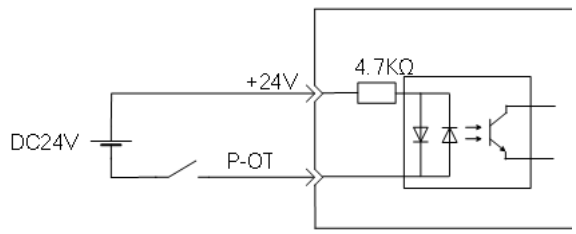	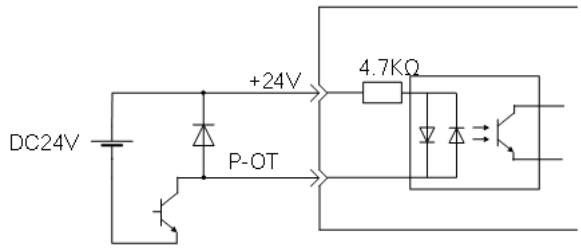

Note: The external power supply (DC24V) must be a capacity of 50mA or more .

2) Photocoupler Input Circuit

The input circuit of the servo unit uses a bidirectional photocoupler. Please choose NPN connection or P NP connection according to the specifications of the machine .

Common Emitter (NPN) Connection	Common Collector (PNP) Connection
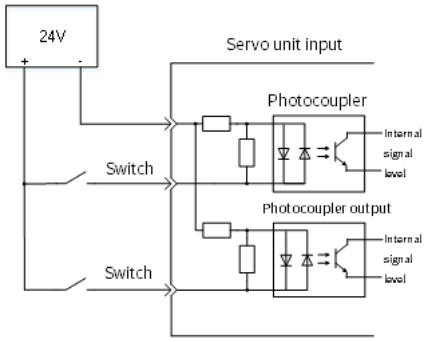	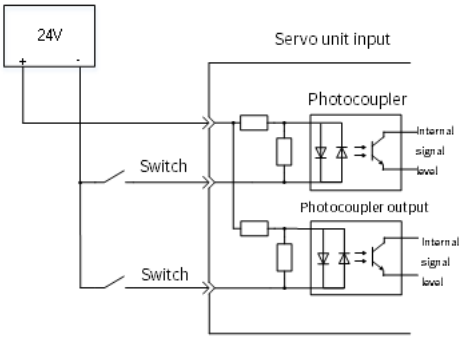

Input Signal Polarity				Input Signal Polarity			
Signal	Active level	Power value	Switch	Signal	Active level	Power value	switch
ON	L level	0V	OFF	ON	H level	24V	ON
OFF	H level	24V	ON	OFF	L level	0V	OFF

Note: Please note that the ON/OFF polarity is different between NPN circuit connection and PNP circuit connection.

3) Pulse Input Circuit

PNP Connection (5V)	NPN Connection (5V)
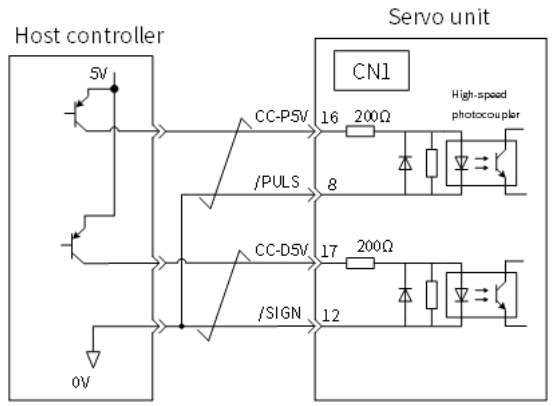	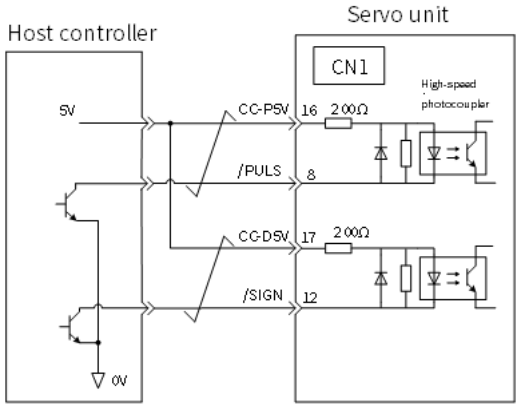
PNP Connection (24V)	**NPN Connection (24V)**
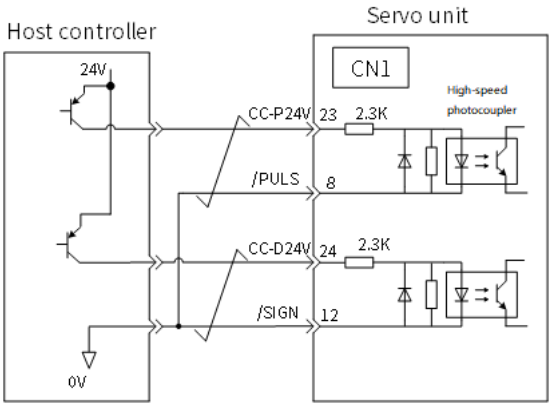	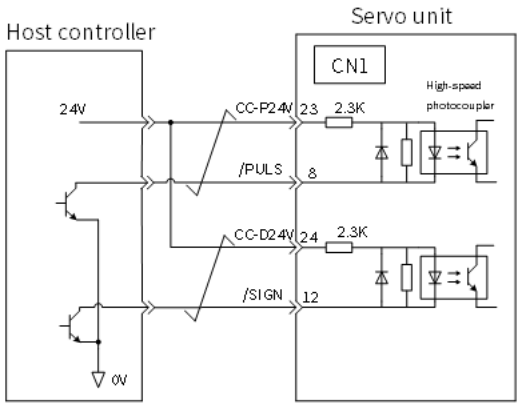
Differential Input	
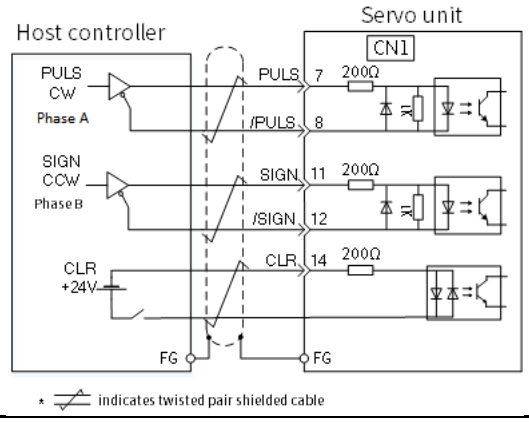	

2.6.5 Name and Function of Output Signal (CN1)

Table 2-17 Names and Functions of Output Signals (CN1)

Control Method	signal name	Needle number	Function	
Any Control Method	ALM+ ALM-	31 32	Turns OFF (opens) when a fault is detected .	
	/TGON+ /TGON-	27 28	Turns ON (closes) when when the servo motor speed exceeds a set value	
	/S-RDY+ /S-RDY-	29 30	Turns ON (closes) when the servo drive is ready to acknowledge the /SON (Servo ON) signal	
	PAOs /PAO	33 34	Phase A Signal	Output the encoder divided pulse output signals with a 90° phase differential
	PBO /PBO	35 36	Phase B Signal	
	PCO /PCO	19 20	Phase B Signal	Outputs the origin signal once every encoder rotation.
	OUT5+ OUT5-	37 38	Output signal	
	D AC0 DAC1	39 48	Analog output 1 Analog output 2	
	FG	Shell	ground is already performed .	
Speed Control	/V-CMP+ /V-CMP-	25 26	Turns ON (closes) if the motor speed is within the set range and matches the reference speed value when speed control is selected.	
Position Control	/COIN+ /COIN-	25 26	Turns ON (closes) if the position deviation reaches the set value when position control is selected.	
Backup	/CLT /VLT /BK /WARN /NEAR	—	Functions can be assigned by changing output signal of /TG0N, /S-RDY, /V-CMP (/C0IN)	

Note: Pin numbers in parentheses ( ) indicate signal grounds.

2.6.6 Output Signals AlPositions

Points

- The signals that are not detected are considered to be OFF. For example, the /COIN (Positioning Completion) signal is considered to be OFF during speed control.
- Reversing the polarity of the /BK (Brake) signal, i.e., changing it to positive logic, will prevent the holding brake from operating if its signal line is disconnected. If you must change the polarity of this signal, verify operation and make sure that no safety problems will exist.
- If you allocate more than one signal to the same output circuit, a logical OR of the signals will be output.

The assignment of the output signals is shown in the table below:

Table 2-18 Output Signal Assignments Table

*□ indicates default settings in table

CN1 pin number		25/(26)		27/(28)		29/(30)		3 7/(38)	
Parameter AlPosition		Signal output polarity setting							
		Setting of pn512.0		Setting of pn512.1		Setting of pn512.2		Setting of Pn512.3	
		0	1 (reverse)	0	1 (reverse)	0	1 (reverse)	0	1 (reverse)
Positioning Completion (/COIN) Setting of Pn50E.0	0	Invalid							
	1	L	h						
	2			L	h				
	3					L	h		
	4							L	h
Speed Coincidence Detection (/V-CMP) Setting of Pn50E.1	0	Invalid							
	1	L	h						
	2			L	h				
	3					L	h		
	4							L	h
Rotation Detection (/TGON) Setting of Pn50E.2	0	Invalid							
	1	L	h						
	2			L	h				
	3					L	h		
	4							L	h
Servo Ready (/S-RDW) Setting of Pn50E.3	0	Invalid							
	1	L	h						
	2			L	h				
	3					L	h		
	4							L	h
Torque Control Detection (/CLT) Setting of Pn50F.0	0	Invalid							
	1	L	h						
	2			L	h				
	3					L	h		
	4							L	h
Speed Control Detection (/VLT) Setting of Pn50F.1	0	Invalid							
	1	L	h						
	2			L	h				
	3					L	h		
	4							L	h
Brake (/BK) Setting of Pn50F.2	0	Invalid							
	1	L	h						
	2			L	h				
	3					L	h		
	4							L	h
Warning (/WARN) Setting of Pn50F.3	0	Invalid							
	1	L	h						
	2			L	h				
	3					L	h		
	4							L	h
Near	0	Invalid							

(/NEAR) Setting of Pn510.0	1	L	h						
	2			L	h				
	3					L	h		
	4							L	h
Reference Pulse Input Multiplication Switching Output(/PSELA) Setting of Pn510.2	0	Invalid							
	1	L	h						
	2			L	h				
	3					L	h		
	4							L	h

If you allocate more than one signal to the same output circuit, a logical OR of the signals will be output.

Reversing the polarity of the /BK (Brake) signal, i.e., changing it to positive logic, will prevent the holding brake from operating if its signal line is disconnected. If you must change the polarity of this signal, verify operation and make sure that no safety problems will exist. .

2.6.7 Output Circuit

The signal output circuits of the servo unit are the following two types.

Points

- Incorrect wiring or incorrect voltage application to the output circuits may cause short-circuit failures.
- If a short-circuit failure occurs as a result of any of these causes, the holding brake will not work. This could damage the machine or cause an accident that may result in death or injury.

(1) Photocoupler output circuit

Photocoupler output circuits are used for the ALM (Servo Alarm), /S-RDY (Servo Ready), and other sequence output signals.. Connect a photocoupler output circuit to a relay or line-receiver circuit.

Example of a Relay Circuit	Example of Differential Loop
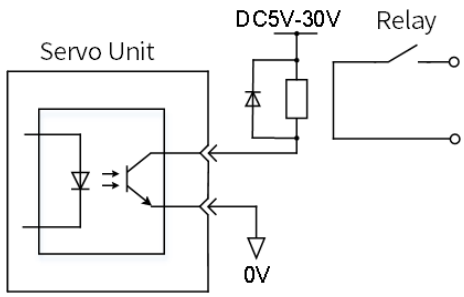	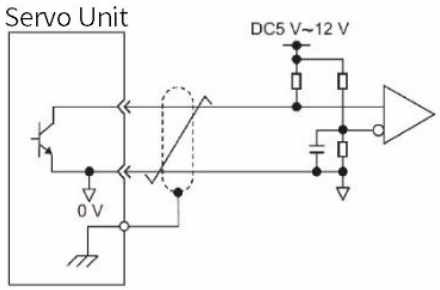
Z Signal Collector Output	
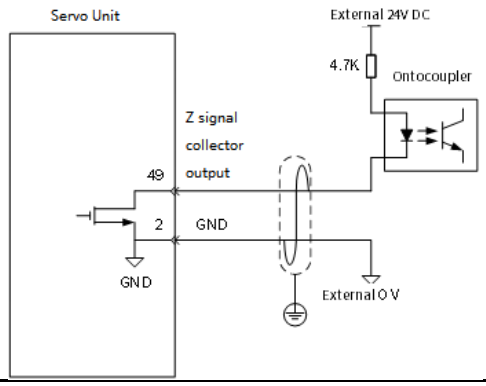	

Note: The specifications of the photocoupler output circuit are as follows:

- Maximum allowable voltage: DC30V
- Current range: DC5mA ~ DC50mA

2.6.8 PG Output

The following describes the terminals 33-34 (A-phase signal), 35-36 (B-phase signal) and 19-20 (C-phase signal) of the CN1 port.

Converts the serial data of the encoder into 2-phase (A-phase, B-phase) pulse output signals (PAO, /PAO, PBO, /PBO) and origin pulse signals (PCO, /PCO) and outputs them through the line driver output circuit . On the host device side, use a differential receiver loop for reception.

2.6.9 Analog Input

The maximum allowable voltage of the input signal is ± 10V.

Analog Voltage Command Input Circuit

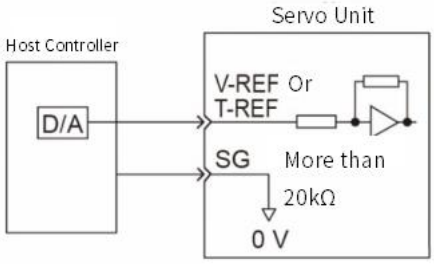

2.6.10 Brake Signal

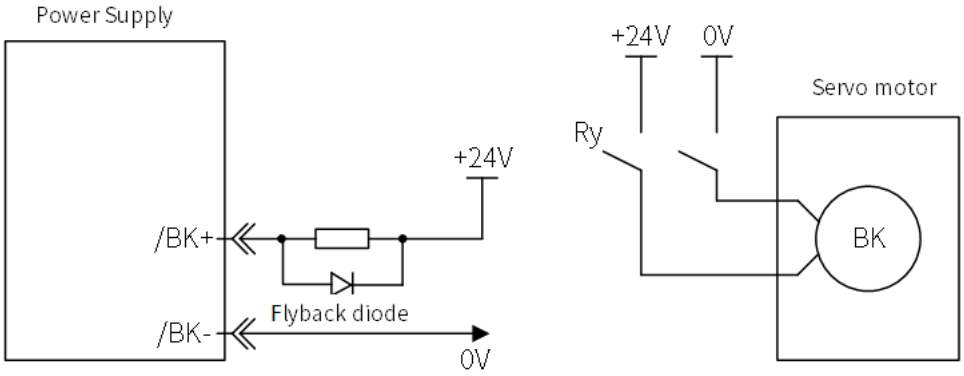

Figure 2-13 Brake Signal Connection

Note:1 . The /BK (Brake) signal cannot be used with the default settings. You must allocate the output signal. Please use "brake signal (/BK) distribution" to set .

2. If you use a 24-V brake, install a separate power supply for the 24-VDC power supply from other power supplies, such as the one for the I/O signals of the CN1 connector. If the power supply is Common, the I/O signals may malfunction.

2.7 Encoder Signal (CN2)

The following describes the mane, function and wiring of encoder signal(CN2)

2.7.1 Name and Function of Encoder Signal (CN2)

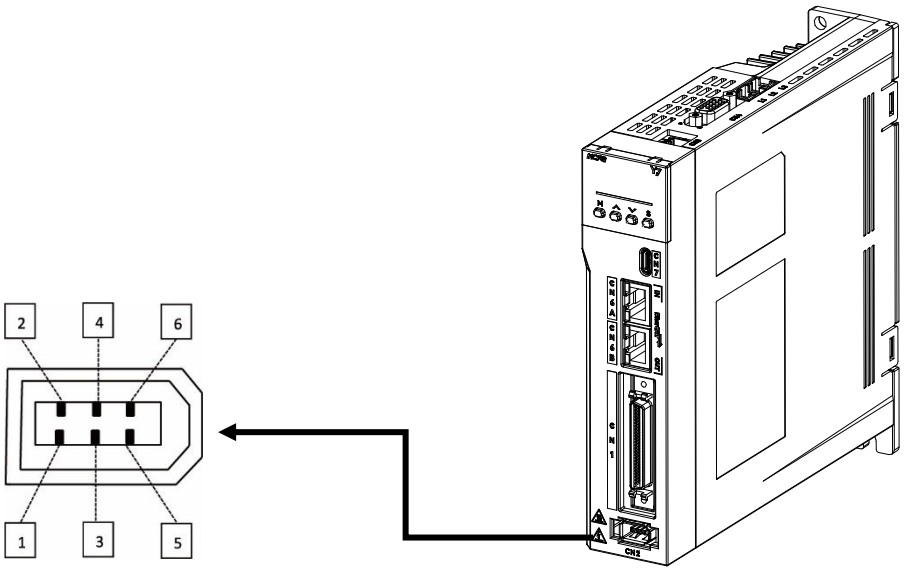

Figure 2-14 Pin Arrangement of Encoder Connector

Table 2-19 Name and Function Table of Encoder Signal (CN2)

Signal name	Pin Number	Function
PG 5V	1	Encoder Power +5V
PG 0V	2	Encoder Power 0V
—	3	—
—	4	—
PS	5	Serial Data (+)
/PS	6	Serial Data (-)
Sshield	Shell	—

2.7.2 Wiring the Servo Unit to Encoder

The wiring example of the encoder, servo unit and host device is shown below.

1) Incremental encoder

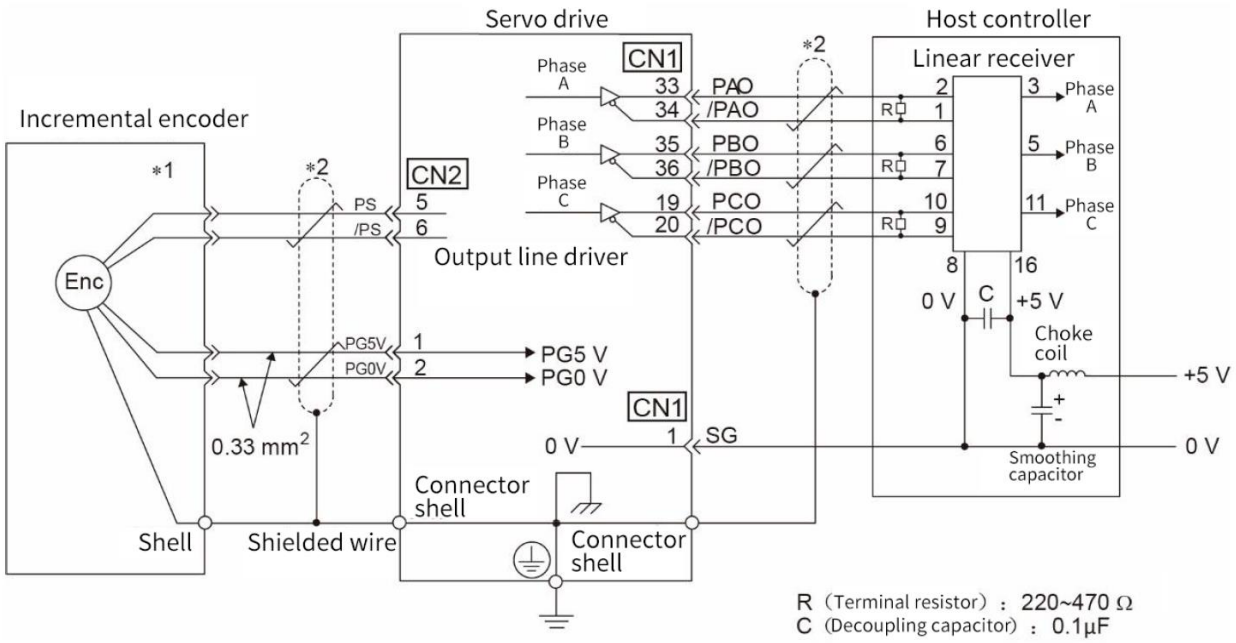

Figure 2-15 Incremental Encoder, Servo Unit and Host Device Connection Diagram

Note: *1 . The connector wiring pin number of the incremental encoder varies depending on the servo motor used.

*2. Indicates shielded twisted-pair wire.

Incremental Encoder Cable — SVCAB-ENC075CA-*L-05 :**

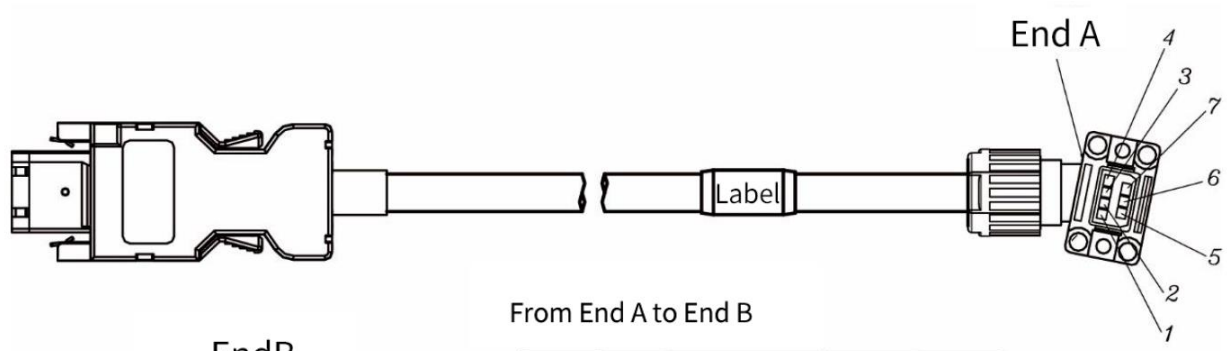

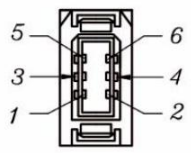

From End A to End B

End A	Type	Color	End B	Signal name
1	AWG26	Orange(red dotted)	1	VCC
2		Orange(black dotted)	2	GND
3		———	3	——
4		White(black dotted)	6	-D0
5		———	4	——
6		Black	Iron shell	SHIELD
7		White(red dotted)	5	+D0

(2) Absolute Encoder

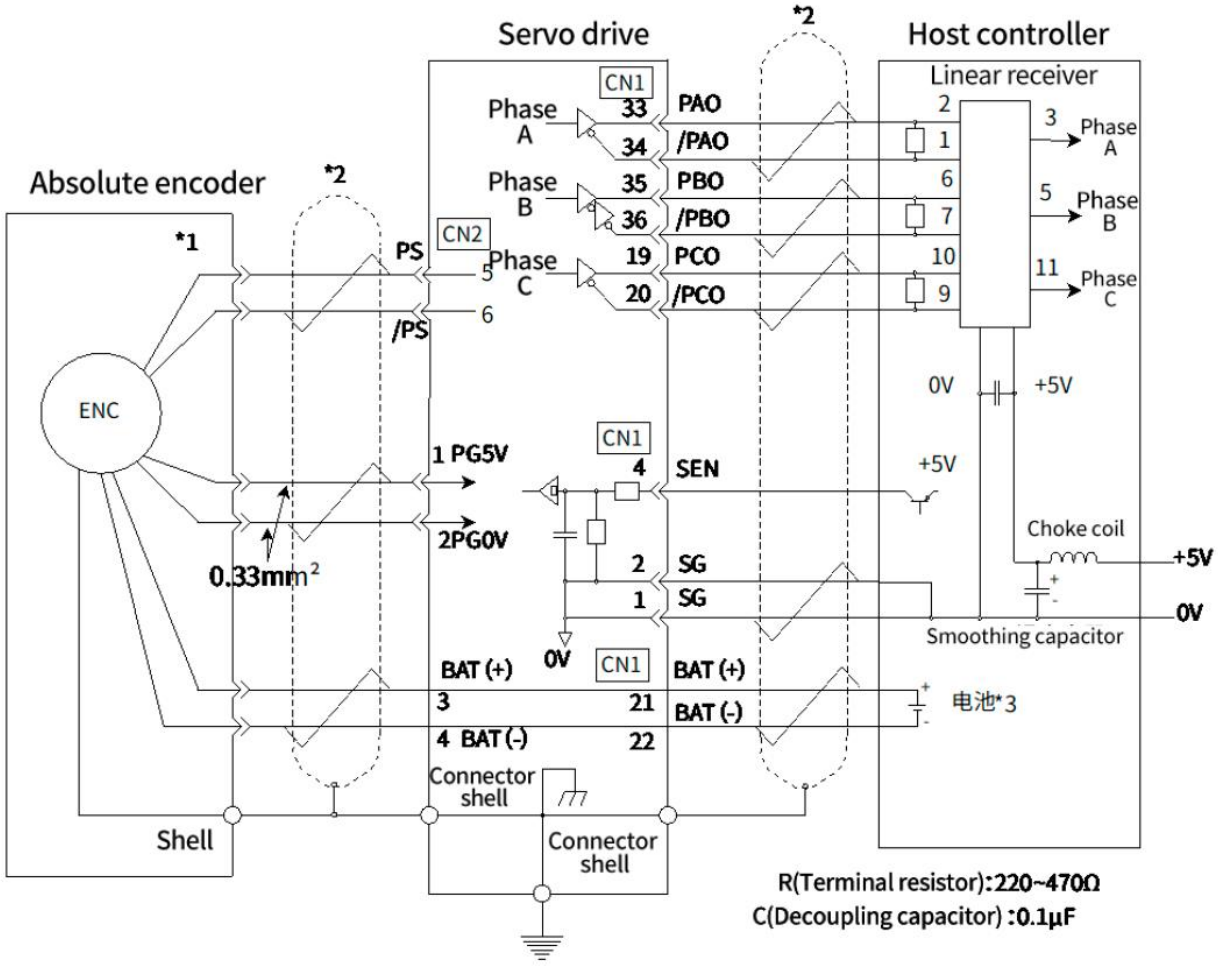

Figure 2-16 Absolute Encoder, Servo Unit and Host Controller Connection Diagram

Note: *1 . The connector wiring pin number of the absolute encoder varies depending on the servo motor used.

*2 . Indicates shielded twisted-pair wire .

*3 . When using an absolute encoder, install a battery on either side of the encoder cable with a battery unit or on the host side to supply power .

Absolute Encoder Cable — SVCAB-ENC075CA-ABS-***L-05

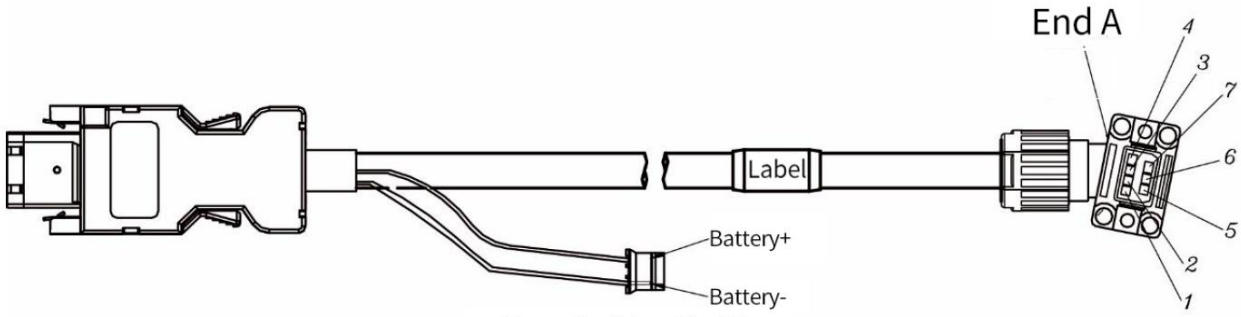

From End A to End B

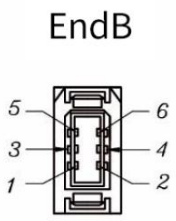

End A	Type	Color	End B	Signal name
1	AWG26	Orange(red dotted)	1	VCC
2		Orange(black dotted)	2	GND
Battery-		Green		
3		———	3	——
4		White(black dotted)	6	-D0
5		Yellow(red dotted)	Battery Yellow (+)	BATT
6		Black	Iron shell	SHIELD
7		White(red dotted)	5	+D0

2.8 Safety Function Signals STO (CN3)

The following describes the name, function and connection example of the safety function signal (CN3)

2.8.1 Names and Functions of the Safety Function Signal (CN3)

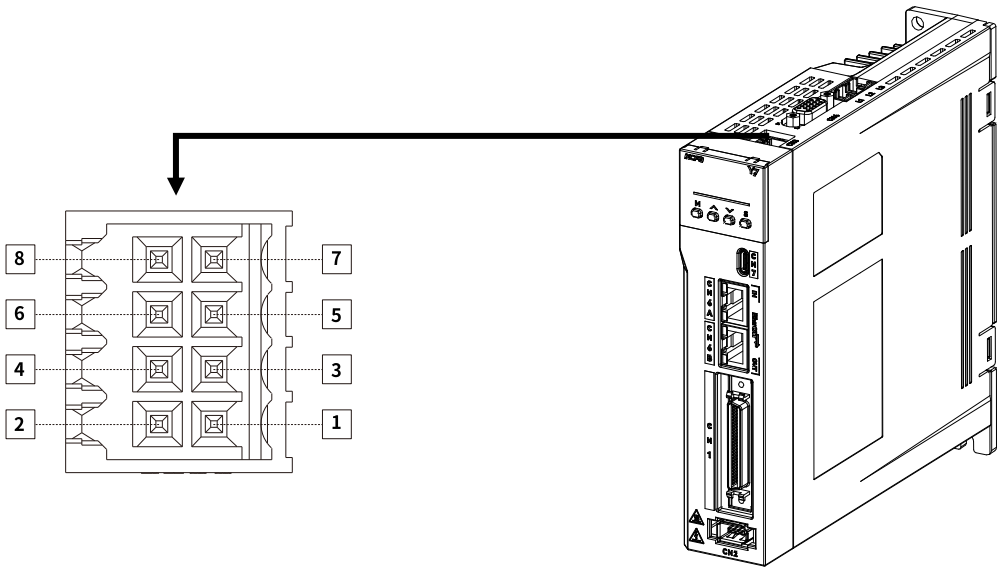

Figure 2-17 Pin Arrangement of Safety Function Signals (CN3)

Table 2-20 Name and function list of safety function use signal (CN3)

signal name	Pin number	Function
—	1	Do not make any connections

—	2	
/HWBB1-	3	For a hard wire base block input. The base block (motor power turned OFF) is in effect when the signal is OFF.
/HWBB1+	4	
/HWBB2-	5	
/HWBB2+	6	
EDM1-	7	Turns ON when the hardware base blocking function is normally active for monitoring loop status output
EDM1+	8	Turns OFF when the hardware base blocking function is normally active for monitoring loop status output

2.8.2 Safety Input Circuit

Use a 0-V common to connect the safety function signals. You must connect redundant input signals.

Input Signal Connection Example

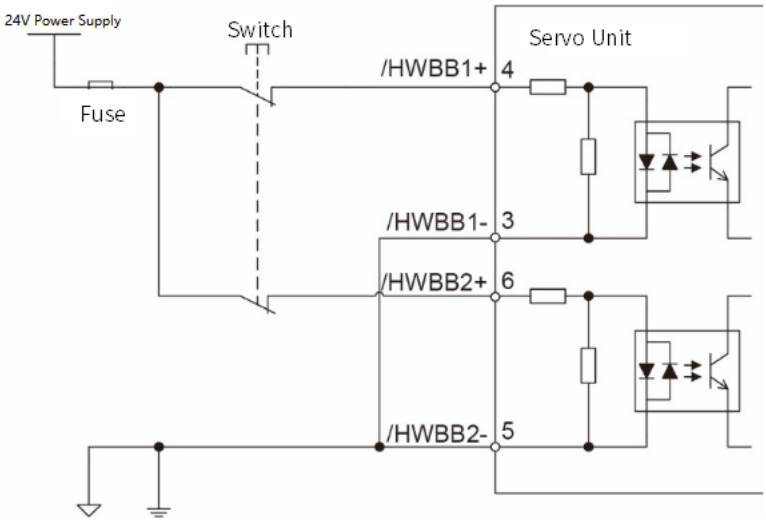

2.8.3 Safety Output Circuit

The following describes safety output signal, the external device monitoring (EDM1). A connection example of the output signal (EDM1 signal) is shown below.

Example of Output Signal Connection

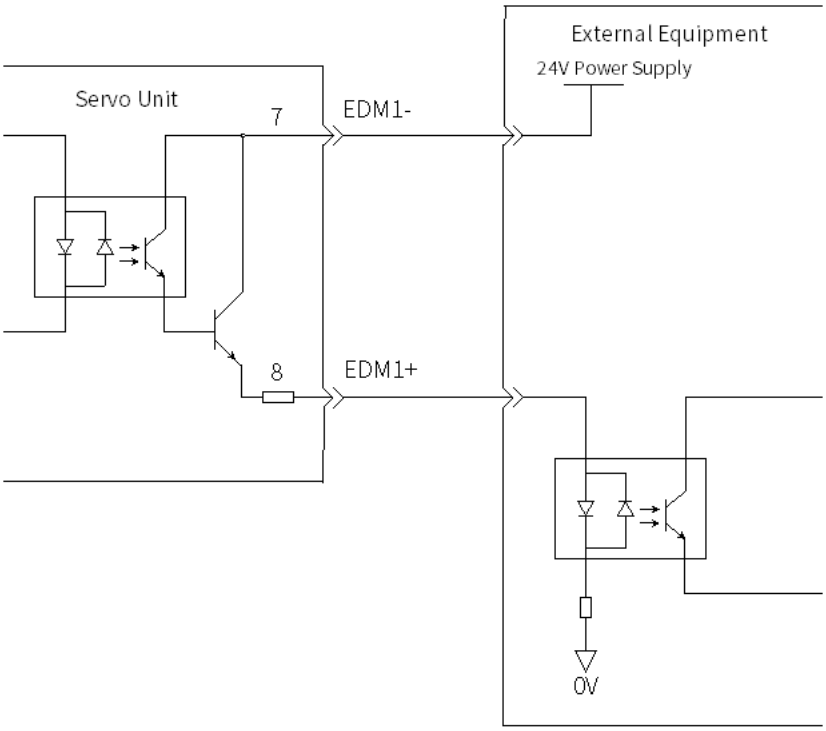

2.8.4 Output Signal (EDM1 Signal) Specifications

Table 2-21 Output Signal Specifications

Type	Signal	Pin number	Output Status	Meaning
output	EDM1	CN3-8 CN3-7	ON	Both the /HWBB1 and /HWBB2 signals are operating normally.
			OFF	The /HWBB1 signal, the /HWBB2 signal, or both are not operating.

Table 2-22 Electrical Characteristics Table of Output Signal (EDM1 signal)

Item	Characteristics	Remarks
Maximum Allowable Voltage	DC30V	—
Maximum Allowable Current	DC 20mA	—
Maximum ON Voltage Drop	1.0V	Voltage between EDM1+ and EDM1- when current is 50 mA.
Maximum Delay Time	20ms	Time from a change in /HWBB1 or /HWBB2 until a change in EDM1

2.8.5 Example of Wiring for Safety Terminals

If you need to use the safety terminal (CN3) , please connect as shown below:

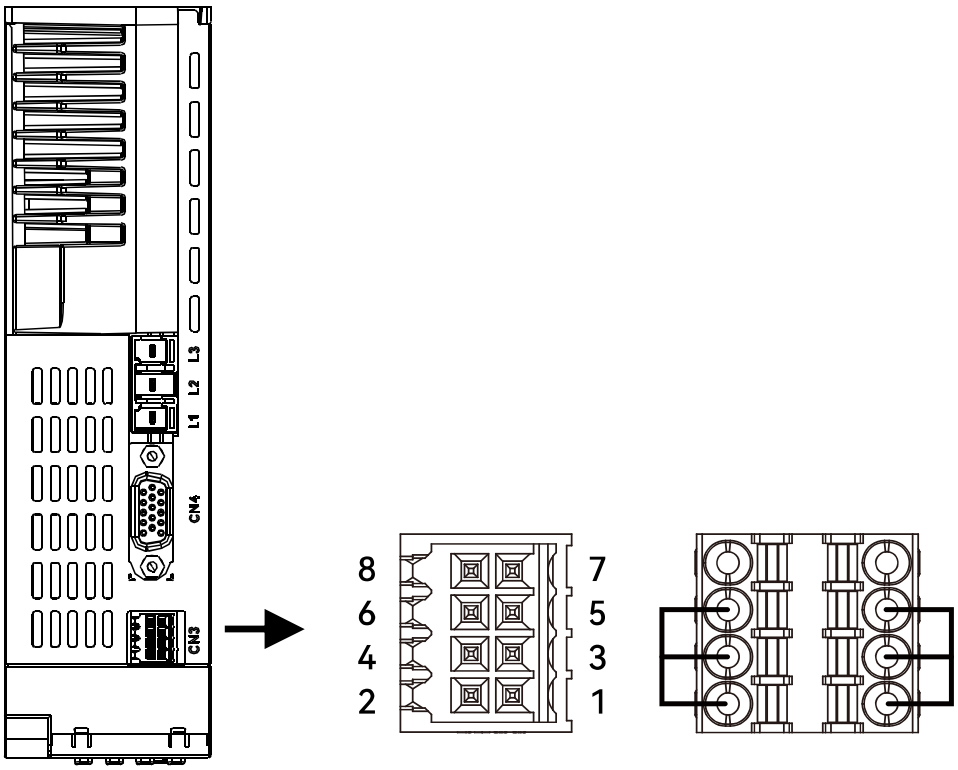

Figure 2-18 Safety Terminal Wiring

2.9 The Second Encoder Interface CN4)

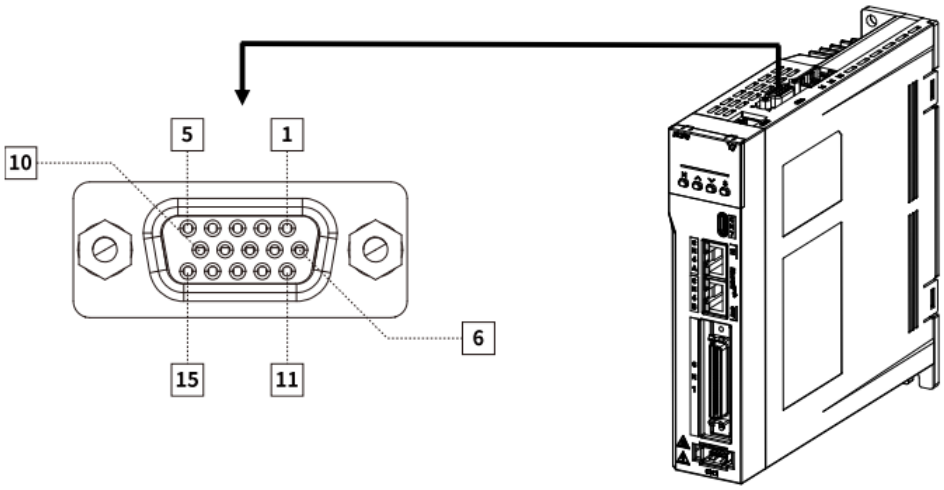

Figure 2-19 CN4 Pin Arrangement

Table 2-23 Names and Functions of the Second Encoder Interface

Pin	Incremental ABZ Encoder with Differential Hall Sensors	SinCos Encoder with Differential Hall Sensors and Z Signal	BISS Encoder	Tamagawa Encoder
1	+5V output Current output≤300mA	+5V output Current output≤300mA	+5V output Current output≤300mA	+5V output Current output≤300mA
2	0V output	0V output	0V output	0V output
3	Hall U+	Hall U+	—	—
4	Hall U-	Hall U-	—	—
5	Hall V+	Hall V+	—	—
6	Incremental encoder A -	Sine encoder Sin -	BISS-C CLK -	Serial DATA -
7	Incremental encoder B-	Sinusoidal encoder Cos -	BISS-C DATA -	—
8	Incremental encoder Z -	Incremental encoder Z -	—	—
9	Hall W +	Hall W +	—	—
10	Hall V -	Hall V -	—	—
11	Incremental encoder A +	Sine encoder Sin +	BIS -C CLK+	Serial DATA+
12	Incremental encoder B +	Sine encoder Cos +	BISS-C DATA+	—
13	Incremental encoder Z +	Incremental encoder Z +	—	—
14	Hall W -	Hall W -	—	—
15	Temperature sensor signal	Temperature sensor signal	Temperature sensor signal	Temperature sensor signal
Shell	Shield	Shield	Shield	Shield

2.10 Communication Connector (CN6)

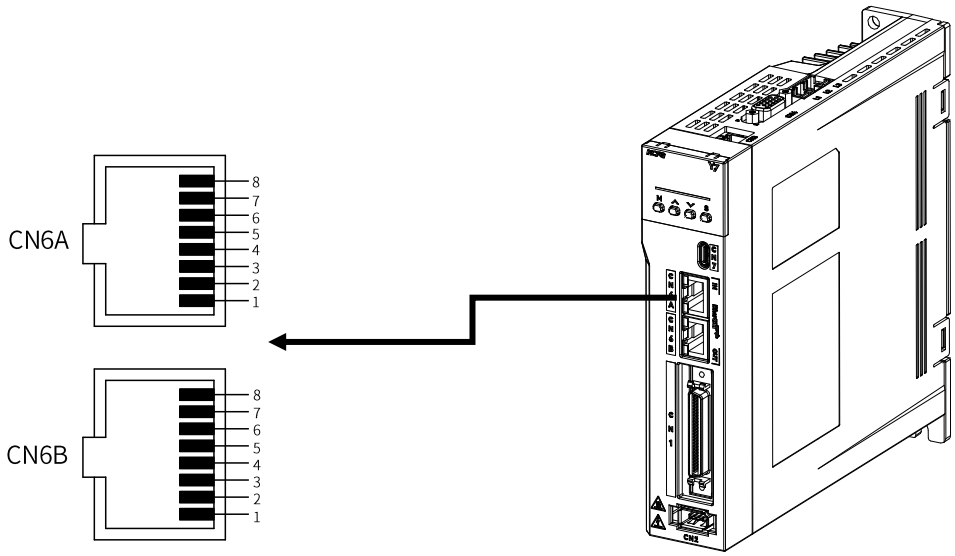

Figure 2-20 CN6 RJ45 Interface Pin Arrangement

Table 2-25 Name and Function of EtherCAT Communication Connectors

Connector	Signal	Pin (Pin)	Meaning
CN6A (In)	—	1-3	—
	RS485B	4	485 signal multi-station communication correspondence from host device
	RS485A	5	485 signal multi-station communication correspondence from host device
	—	6	—
	—	7	—
	GND	8	Communication signal grounding
CN6B (Out)	—	1-3	—
	RS485B	4	85 signal multi-station communication correspondence from host device
	RS485A	5	85 signal multi-station communication correspondence from host device
	—	6	—
	—	7	—
	GND	8	Communication signal grounding

2.11 Brake Input Connection (CN10)

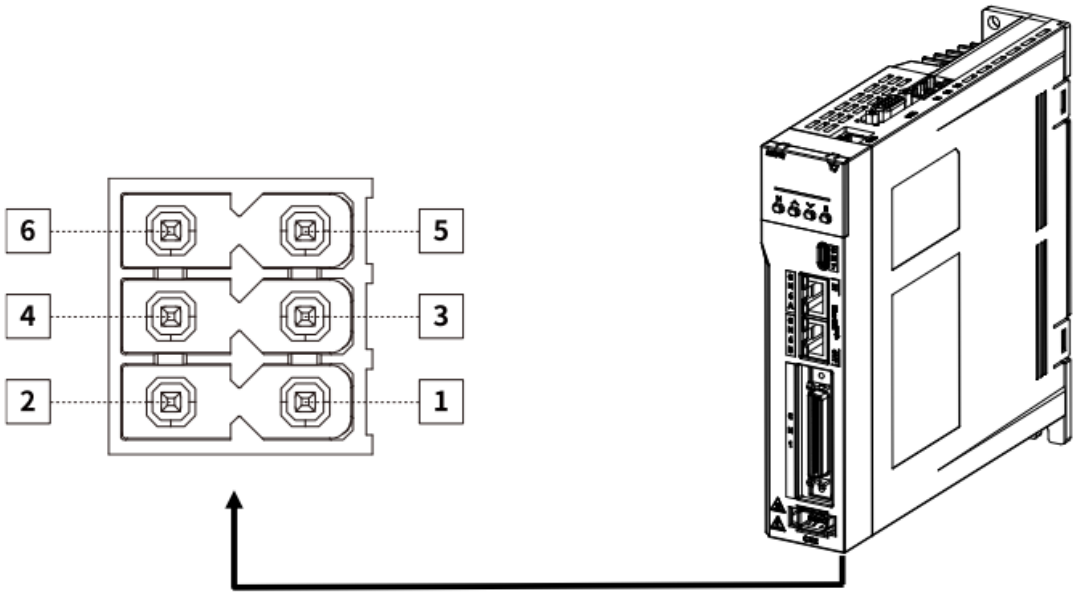

Figure 2-21 CN10 Brake Input Interface Pin Arrangement

Table 2-26 Name and Function of Brake Interfaces

Signal	Pin number	Function
24V	1	Brake external power supply
0V	2	
BK+	3	Brake BK+
BK-	4	Brake BK-
NTC+	5	Temperature control+
NTC-	6	Temperature control-

2.11.1 Brake wiring

The brake is a mechanism that prevents the servo motor shaft from moving when the servo drive is not running, and keeps the motor locked in position, so that the moving parts of the machine will not move due to its own weight or external force.

Brake Wiring The connection of the brake input signal has no polarity,please install a separate power supply for the 24-VDC power supply from other power supplies. The standard wiring example of the brake signal BK and the brake power supply is as follows:

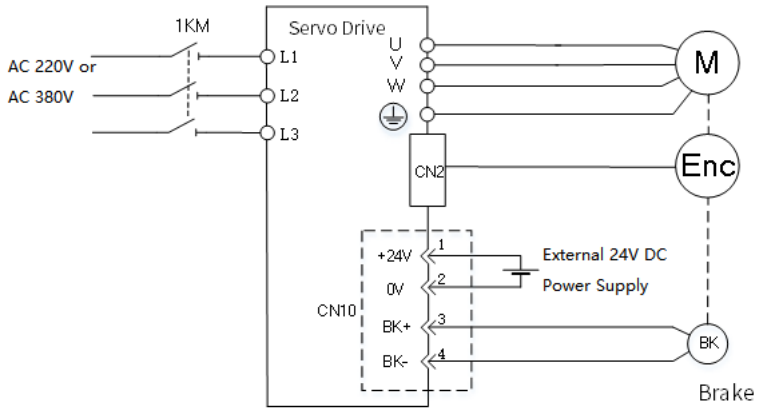

1QF:Wiring circuit breaker
FIL: Noise suppressor
1SUP: Surge absorber

Figure 2-22 Brake CN10 Connection

Note: It is forbidden for the brake to share the power supply with other electrical appliances to prevent the voltage or current from decreasing due to the work of other electrical appliances, which will eventually cause the brake to malfunction.

2.12 Standard Wiring Diagram in Position/Speed/Torque Control Mode

2.12.1 Connection Example for Position Control (Pulse type)

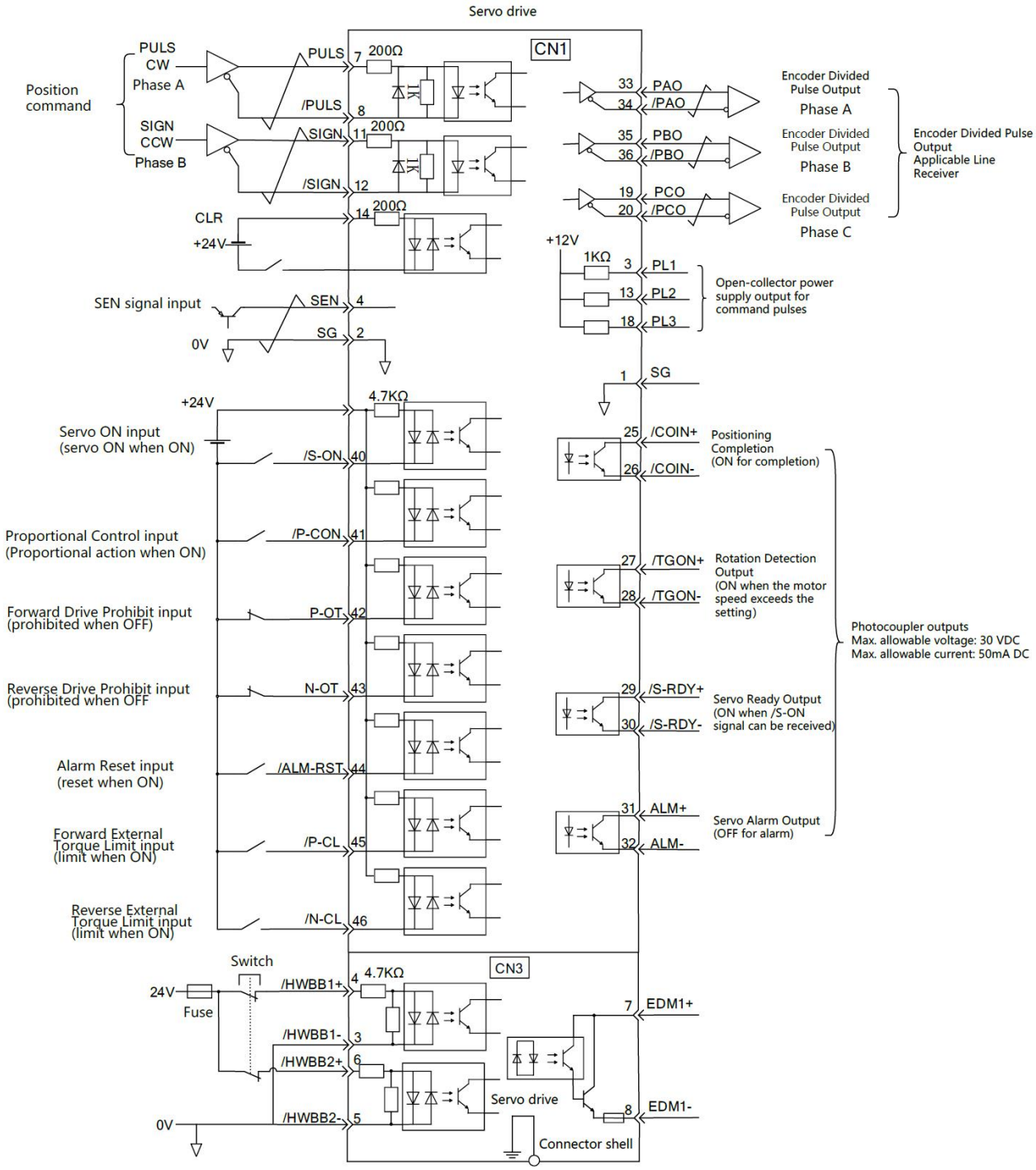

Figure 2-23 Connection when Position Control (Pulse type)

2.12.2 Connection Example for Speed Control (Pulse type)

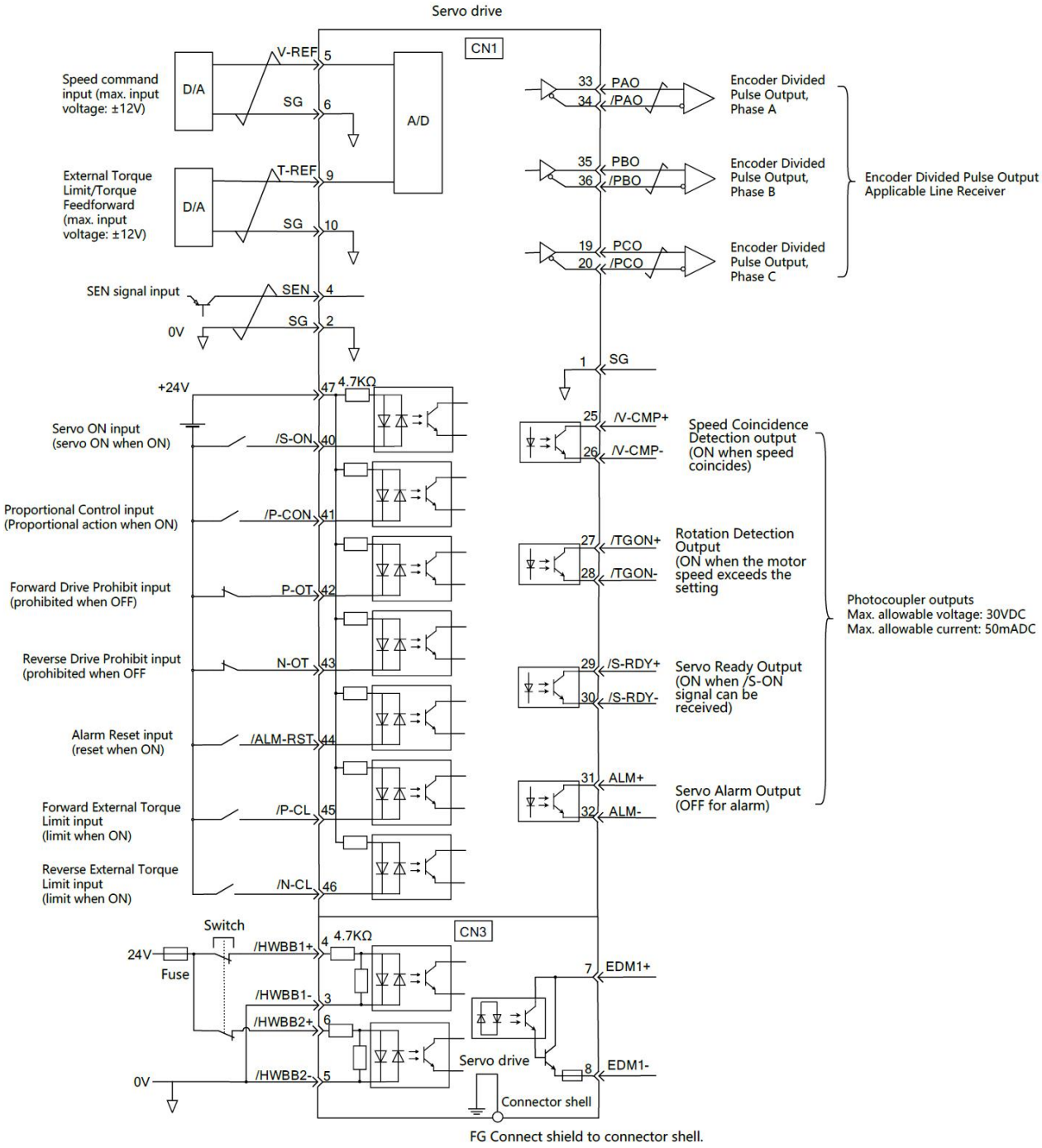

Figure 2-24 Connection when Speed Control(Pulse type)

2.12.3 Connection Example for Torque Control (Pulse type)

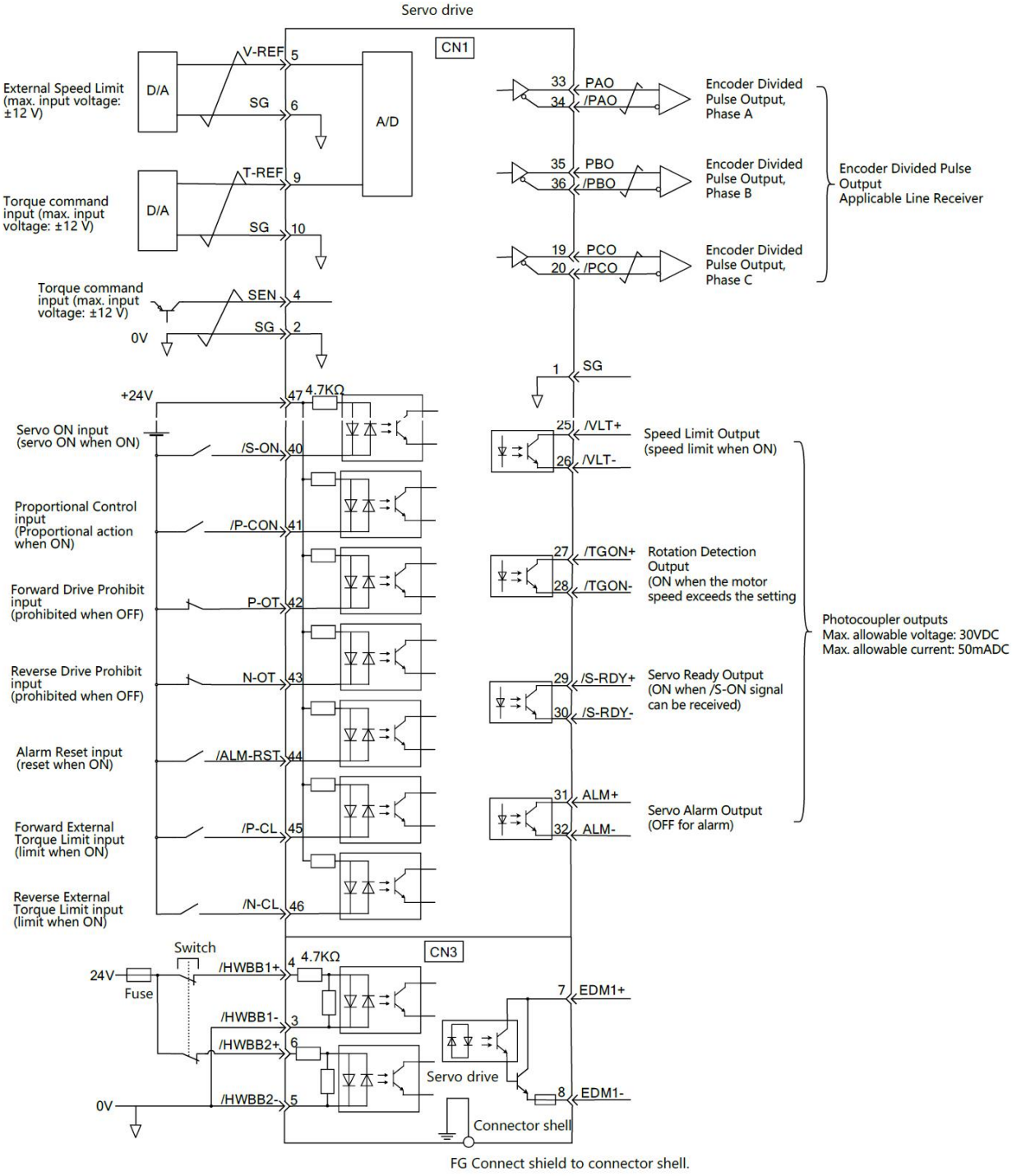

Figure 2-25 Connection when Torque Control(Pulse type)

2.13 Noise and Harmonic countermeasures

The following describes countermeasures against noise and harmonics

2.13.1 Countermeasures against Noise

Note: 1. As the servo unit is designed as an industrial device, no measures provided to prevent radio interference.

2. The Servo unit uses high-speed switching elements in the main circuit. Therefore external devices may be affected by switching noise. If the equipment is to be used near private houses or if radio interference is a problem, take countermeasures against noise.

This servo unit uses microprocessor. Therefore, there may be noise interference from its externals.

In order to prevent mutual noise interference between the servo unit and its external equipment,take the following countermeasures against noise interference as required.

- Install the input reference device and noise filter as close to the servo unit as possible
- Always install a surge absorber for relays, solenoids, and magnetic contactor coils.
- Do not place the main circuit cables and I/O signal cables/encoder cables in the same duct or bundle them together. Also, separate the cables from each other by at least 30 cm.
- Do not share the power supply with an electric welder or electrical discharge machine. If the servo unit is placed near a high-frequency generator, install Noise Filters on the input side on the main circuit power supply cable and control power supply cable even if the same power supply is not Common with the high-frequency generator. For the connection method of the noise filter, refer to "(1) Noise filter".
- Please implement suitable grounding measures, refer to "(2) Grounding".

1) Noise filter

Connect the noise filter to an appropriate place to avoid adverse effects of noise on the servo unit.

The following is an example of wiring for countermeasures against noise.

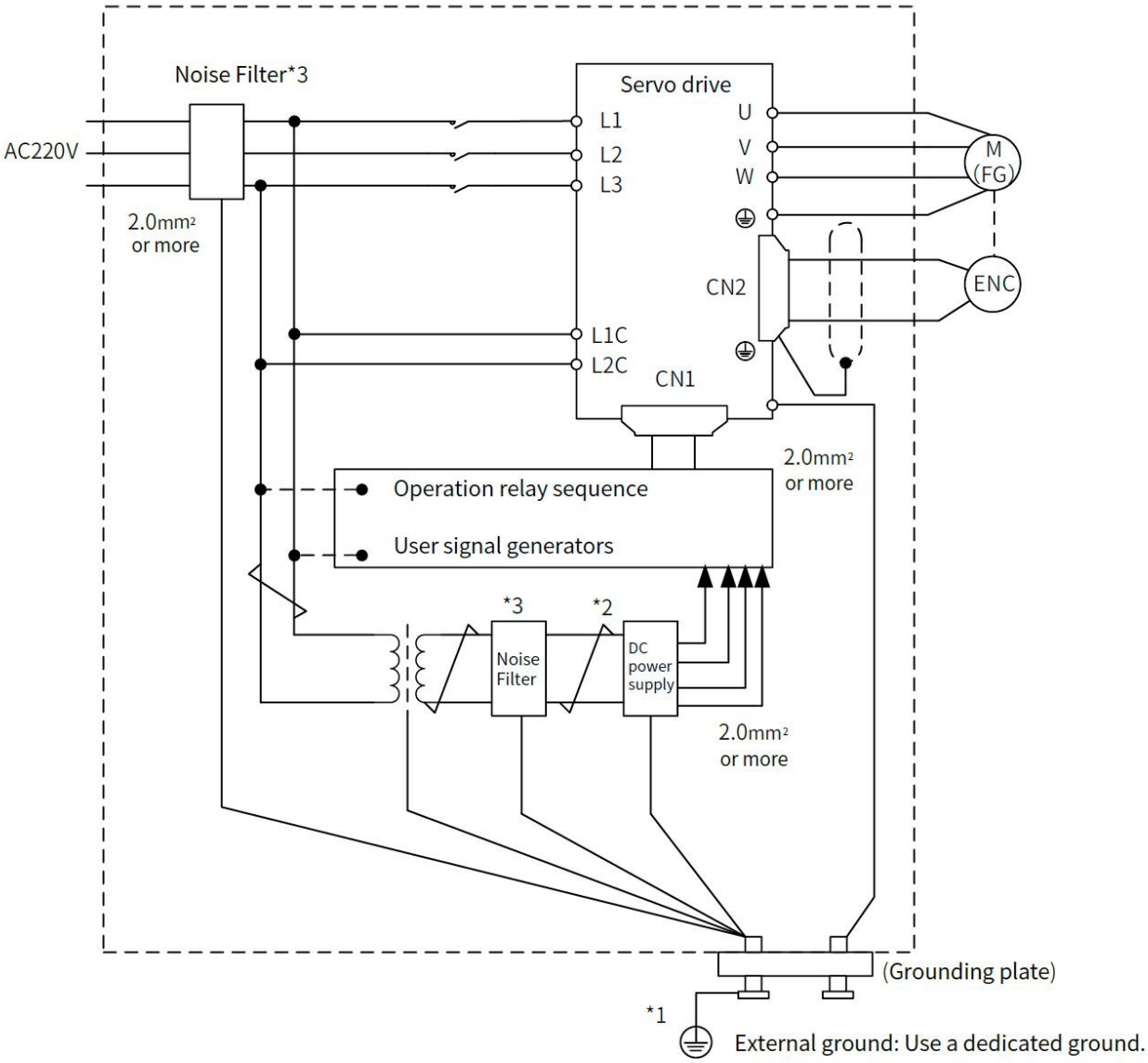

Figure 2-26 Wiring Example of Noise Countermeasure

Note : * 1. For the ground wire, use a wire with a thickness of at least 2.0 mm2 (preferably, flat braided copper wire).

* 2. Please use twisted-pair wires for wiring

* 3. Regarding the use of noise filters, please observe the precautions in 2.13.1 "Noise and its countermeasures"

2) Grounding

In order to prevent malfunction due to the influence of noise, the proper grounding method is as below.

Motor Frame Ground

If you ground the servo motor through the machine, switching noise current can flow from the main circuit of the servo unit through the stray capacitance of the servo motor. To prevent this, always connect the FG terminal of the servo motor main circuit cable connected to the servo motor to the ground terminal on the servo unit. Also be sure to ground the ground terminal on servo unit

Noise on I/O Signal Cables

Implement one-point grounding on the 0V line (SG) of the I/O signal cable . When the main circuit cable of the servo motor is covered with a metal sleeve, be sure to ground at one point for the metal sleeve and the junction box.

2.13.2 Noise Filter Wiring and Connection Precautions

(1) Noise Filter for Brake Power Supply

Use a noise filter for the brake power input for a servo motor of 400W or less with brake.

(2) Precautions for Noise Filter Installation and Wiring

Please observe the following precautions when installing and wiring the noise filter.

Note: Depending on the model, some noise filters have a large leakage current. In addition, due to the different grounding conditions, the leakage current will also change greatly. Please consider the grounding conditions and the leakage current of the filter, etc., and choose to use leakage detectors and leakage circuit breakers. For details, please consult the filter manufacturer

Separate input lines from output lines. Do not place input lines and output lines in the same duct or bundle them together.

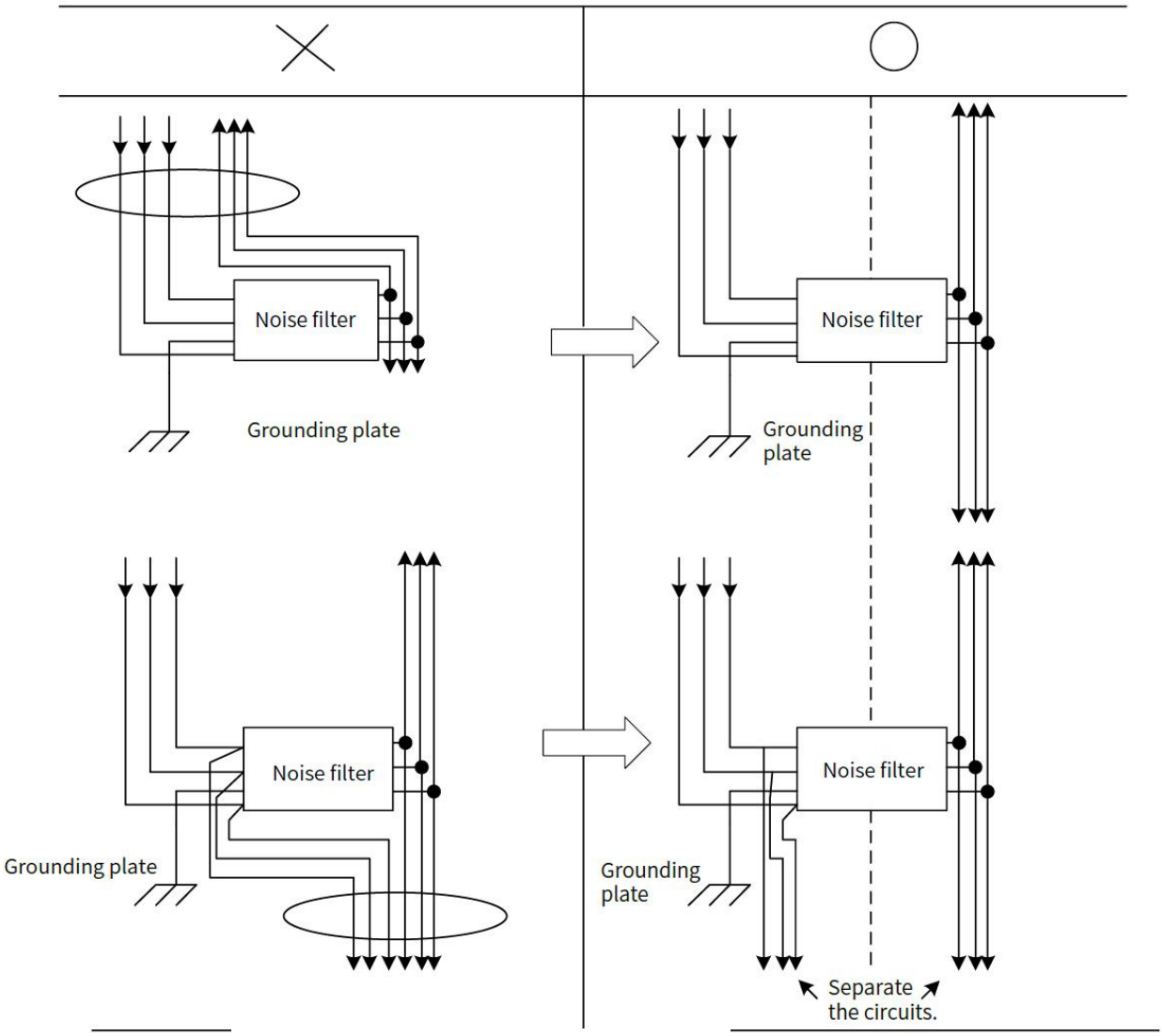

Figure 2-27 Noise Filter Wiring

Separate the noise filter ground wire from the output lines. Do not place the noise filter ground wire, output lines, and other signal lines in the same duct or bundle them together.

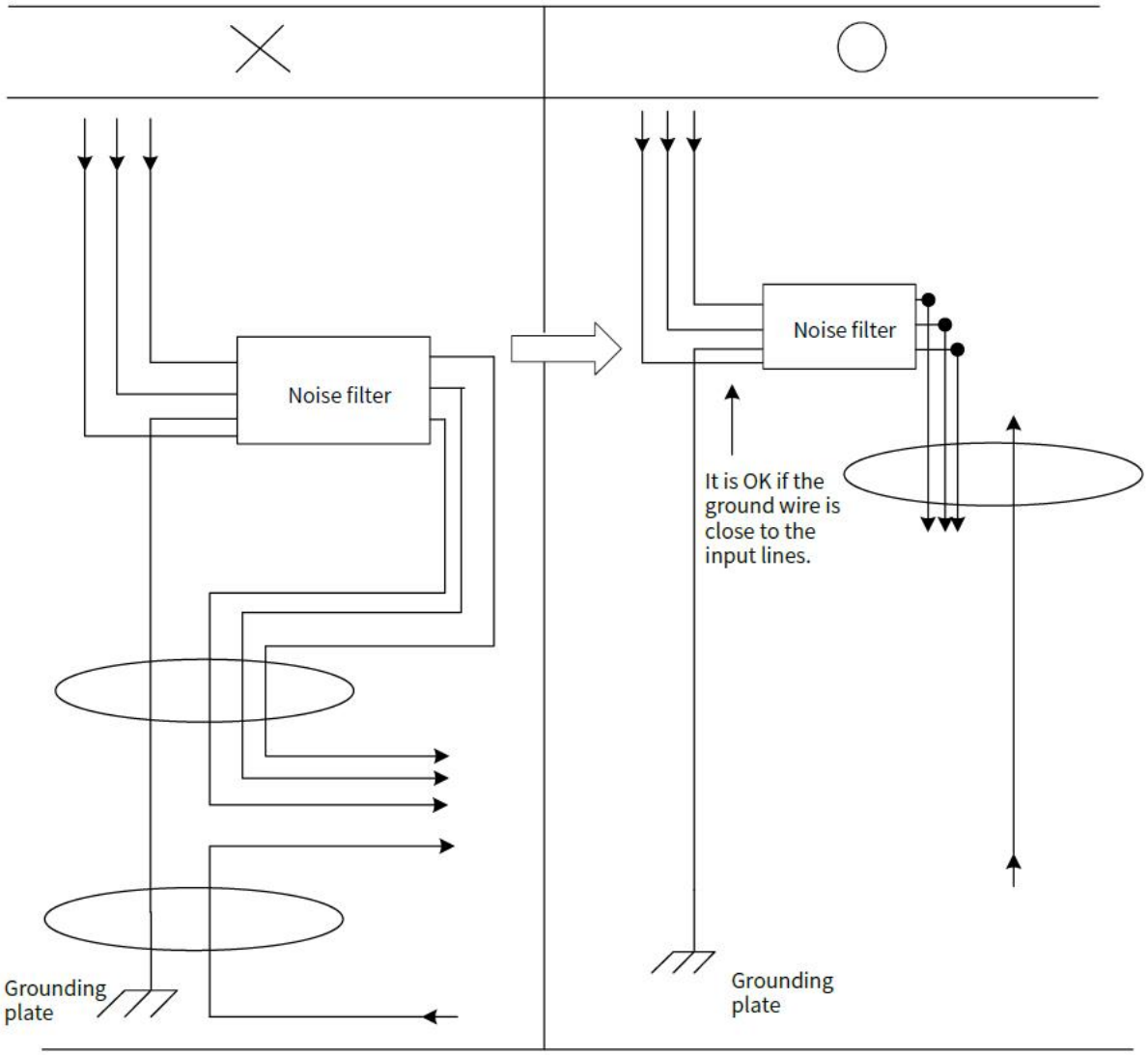

Figure 2-28 Noise Filter Grounding

Connect the ground wire of the noise filter to the grounding plate separately. Do not connect other ground wires.

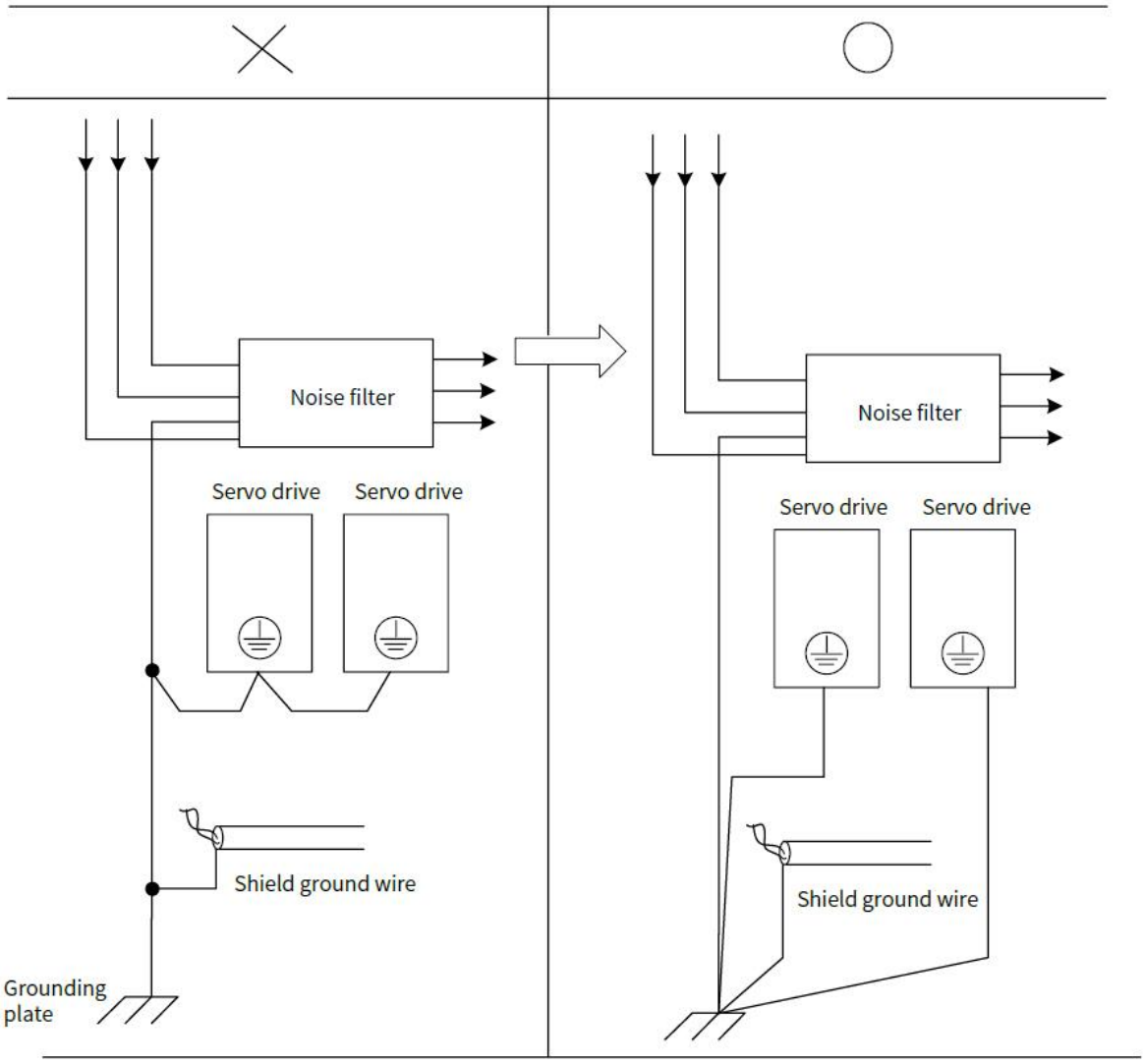

Figure 2-29 Noise Filter Grounding

If a noise filter is located inside a control panel, first connect the Noise Filter ground wire and the ground wires from other devices inside the control panel to the grounding plate for the control panel, then ground the plate..

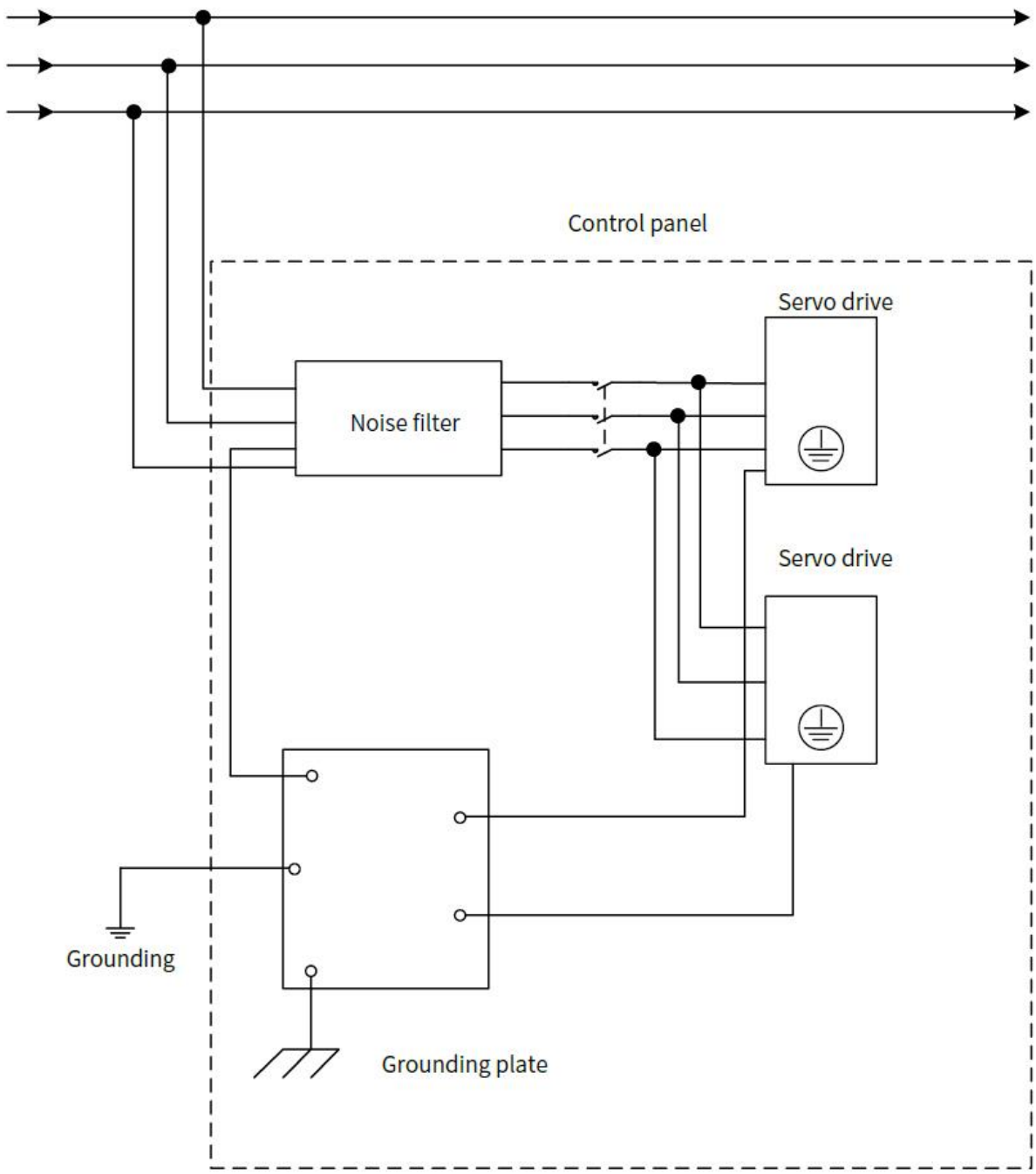

Figure 2-30 Noise Filter and Control Panel Grounding

2.13.3 Connection of Reactor for Harmonic Suppression

When it is necessary to take countermeasures against high-order harmonics, a reactor for suppressing high-order harmonics can be connected to the servo unit.

AC220V/380V Power Input Type Servo Unit

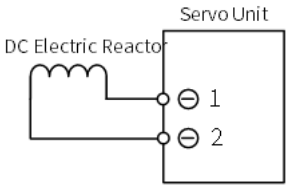

Note: * 1. Connection terminals 1 and 2 for a DC Reactor are connected when the servo unit is shipped. Remove the lead wire and connect a DC Reactor.

* 2. The reactor is optional (need to be equipped separately).

Chapter 3 Panel Operation Procedures and Display

Chapter 3 Panel Operation Procedures and Display 77

3.1 Panel Operation procedures and Display 78

3.1.1 Panel Operator Keys 78

3.1.2 Changing Modes 78

3.1.3 Status Display and Its Judgment 79

3.2 Utility function (Fn □□□) 80

3.3 Parameter Setting (Pn □□□) 81

3.3.1 Numeric Settings 81

3.3.2 Selecting Functions 81

3.4 Operation of Monitor display (Un□□□) 82

3.1 Panel Operation Procedures and Display

The user can confirm the servo status through the panel display of the servo unit .

Modify and monitor the Utility function (Fn □□□), parameter setting (Pn □□□) and monitoring function (Un □□□) through the operator keys. Also, when an alarm or warning occurs , the corresponding alarm/warning number is displayed .

3.1.1 Panel Operator Keys

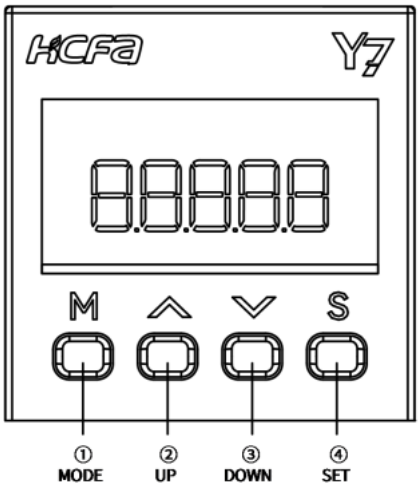

Figure 3-1 Panel Operator

Table 3-1 Panel Operator Keys

Key number	Key name	Function
①	MODE key (Mode and confirmation key)	(1) Switch the basic mode: Utility function, parameter setting, monitoring function . (2) Confirm the set value: After modifying the parameters, press and hold this key for more than 1 second to confirm the set value. The effect is consistent with the SET key.
②	UP key	(1) Increase the set value. (2) It is used as the forward rotation start key when JOG is running in the Utility function mode.
③	DOWN key	(1) Decrease the setting value. (2) It is used as the reverse start key when the JOG is running in the Utility function mode.
④	SET key	(1) Long press this key for more than 1 s to display the set value of each parameter . (2) After modifying the parameters, press and hold this key for more than 1 s to confirm the set value. (3) Short press this key to move the digit to the left by one digit (when the digit is flashing) . If the data length exceeds the four digits displayed on the panel, press it four times to switch the panel display to the middle four digits, and then press four times to switch to the top two.

3.1.2 Changing Modes

Table 3-2 Modes Switching Table

Function	MODE key	Long Press the SET key
Initial status	. bb	——
Utility Function	Fn000	0 9b3
Parameter Setting	Pn000	n0000
Monitoring Function	Un000	0000

Note: Press the MODE key to switch modes, it will cycle from top to bottom according to the table .

3.1.3 Status Display and Its Judgment

After the power is turned on, the normal state display is shown in Figure 3-2 . The first and second data bits that below the panel are used to judge signal status, and the short codes are used to judge the motor status .

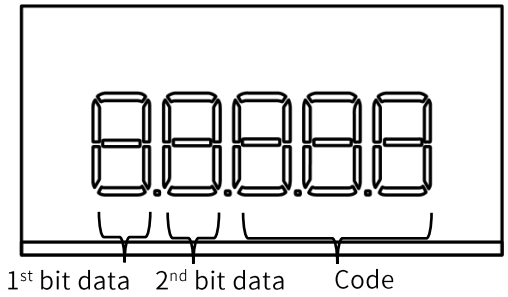

Figure 3-2 Display Status After Power is On

Table 3-3 Bit Data Interpreting table

Serial number	Panel Display	Control mode	Meaning
1st Bit Data a		Position Control	Lit when the position tracking error is within the set value of Pn522, and not lit when it exceeds the set value of Pn522.
		Speed Control	Lit when the speed tracking error is within the set value of Pn503 , and not lit when it exceeds the set value of Pn503. Note: It is always on during torque control.
1st Bit Data g		Position Control, Speed Control, Torque control	Lit when the motor is not energized (servo OFF) , and not lit when the motor is energized (servo ON).
1st Bit Data h		Position Control, Speed Control, Torque control	Lit when the control power is turned on.
2nd Bit Data b	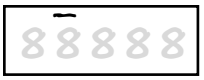	Position Control, Speed Control, Torque control	Lit when the speed exceeds the set value of Pn502, and not lit when it is lower than the set value of Pn502
2nd Bit Data g	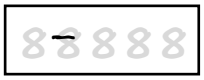	Position Control	Lit when there is a pulse input.
		Speed Control	Lit when the command speed is higher than the set value of Pn502, and not lit when it is lower than the set value of Pn502.
2nd Bit Data d		Position Control	Lit when a pulse clear signal is being input. Not lit when there is no pulse clear signal.
		Speed Control	Lit when the torque command is greater than 10% of the rated torque of the motor, and not lit when it is less than 10% of the rated torque of the motor.

2nd Bit Data h	88888	Position Control, Speed Control, Torque control	Lit when the main power is turned on, and not lit when the main power is not turned on.

Table 3-4 Code Interpreting Table

Display	Meaning
. bb	Base Block Active Indicates the servo is OFF.
=run	Operation in Progress Indicates the servo is ON.
.not	Reverse Drive Prohibited Indicates that the N-OT (Reverse Drive Prohibit) signal is open.
.Pot	Forward Drive Prohibited Indicates that the P-OT (Forward Drive Prohibit) signal is open.
.9b8	Security Function Indicates the safety function is activated and the servo is in the hardware base block status
.C90	Alarm Log Indicates the alarm number

3.2 Utility Function (Fn □□□)

The utility function is used for the functional operation of the servo unit , take the Origin Search " Fn003 " operation as an example.

(1) Press Ⓜ key to switch to Utility mode " FNooo " is displayed.

(2) Press Ⓐ or Ⓥ key to select to " FN003 ".

(3) Press Ⓢ After pressing the key for 1 second, Fn003 is displayed(origin search) execution screen " CSR " , the duration is about 1 second.

(4) First press the button Ⓜ to enable the servo , and then press and hold Ⓐ(the motor rotates forward) or Ⓥ (motor reverse rotation) to search for the origin, the search direction of the servo motor rotation origin changes according to the setting of Pn000.0 . Keep pressing the Ⓐ (motor forward) or Ⓥ (motor reverse) key until the servo motor stops, and the panel displays " CSR ", at this time, the motor searches for the origin.

(5) After the origin search is completed, press the key Ⓜ to disable the motor , and the panel displays " CSR " .

(6) After pressing the key Ⓢ for 1 second, return to the Utility function menu " FN003 " (origin search function)

3.3 Parameter Setting (Pn□□□)

There are two types of Parameter setting for Pn□□□.

The first type of Parameter for numeric settings: set a specific value.

The second type of Parameters for Selecting Functions: Select the application function.

The setting methods of "numerical setting type" and "function selection type" are introduced respectively below.

Note: When the panel displays incomplete parameters, please modify the parameter "Pn00B.0" to "1: Display all parameters" .

In the default setting, only the parameters for setting are displayed, and the parameters for adjustment are not displayed. To display all parameters, please set Pn00B =n. □□□1 (display all parameters).

Table 3-5 Pn00B =n. □□□1 Parameter Settings

Parameter		Meaning	When Enabled	Classification
Pn00B (Function selection application switch B)	n. □□□0 (default setting)	Only parameters for setting are displayed	After restart	Setup
	n. □□□1	show all parameters		

3.3.1 Numeric Settings

Take the electronic gear ratio (numerator): " Pn 20E " changed to 8388608 as an example.

(1) Press Ⓜ key to switch to parameter setting mode " PN000 " is displayed.

(2) Press Ⓢ After selecting the digit to be changed, press the ⋀ or ⋁ key to select " FN20E ".

(3) Press and hold the key Ⓢ for about 1 second, and the current setting value of "Pn20E" shown on the screen will be displayed " _0004 " .

(4) Press the key Ⓢ to move the flashing digit left and right, and then press the ⋀ or ⋁ key to set the last four digits 8608 , and the panel displays " _8608 ".

(5) Press the key Ⓢ to move the flashing number to the leftmost, and press Ⓢ key again to switch to the first four-digit setting page, and the panel displays " -0000 ".

(6) Press the key Ⓢ to move the flashing digit left and right, and then press ⋀ or ⋁ key, set the first four digits to 0838 , the panel will display " -0838 ".

(7) So far Pn 20E is the first four digits + last four digits = 08388608 .

(8) After pressing the Ⓢ key for about 1 second, the set value is confirmed , and the value on the panel flashes three times quickly.

(9) Press and hold the key Ⓢ again for about 1 second to return to parameter setting " PN20E " (Electronic Gear Ratio Numerator) panel is displayed.

Note: 1. When the last four digits are selected, the first data bit d is on, and when the middle four digits are selected, the first data bit g is on .

2. When the first two digits are selected, the first data bit a lights up . If you want to set more than four digits, the method is the same.

3.3.2 Selecting Functions

Take the function selection basic switch 0: " Pn000 " as an example to select " Pn000.1 " as the control mode to change from speed control to position control .

(1) Press Ⓜ key to switch to parameter setting mode " Pn000 " is displayed.

(2) Press and hold the key Ⓢ to display the original set value of "Pn000" shown on the screen , and the panel displays " n0000 " .

(3) Press Ⓢ key for once to move the digit to the left by one (flashing) to select P n 000.1 , and the panel displays " n0000 " .

(4) Press the ⋀ or ⋁ key to change the setting value to "N.0010" , and the panel display is " n0010 ".

(5) Press and hold the key Ⓢ for about 1 second to confirm the set value , and the panel value flashes three times

quickly.

(6) Press and hold the key Ⓢ again for about 1 second to return to the Pn 000 menu, and the panel is set to " Pn000 ".

(7) In order to make the setting effective, please reconnect the power supply of the servo unit.

3.4 Operation of Monitor display (Un□□□)

The monitoring display is used to monitor the status of the servo unit , take the "Un000 " motor speed monitoring operation as an example.

(1) Press Ⓜ key to switch to utility mode " Un000 " is displayed.

(2) PressⓈ After pressing the key for 1 second, the current motor speed will be displayed " 0000 " (display 0 000 means the speed is 0).

(3) Press and hold the key Ⓢ for about 1 second , return to " Un000 "menu.

Chapter 4 Trial Operation

Chapter4 Trial Operation 83
4.1 Inspection and Precautions Before Trial Operation 84
4.2 Trial Operation for Servo Motor 84
4.3 Origin Search Positioning (Fn003).....84
4.4 Trial Operation from Host Controller for Servo Unit without a Load.....84
4.4.1 Input Signal Connection and Parameter Settings..... 85
4.4.2 Trial Operation for Speed Control..... 85
4.4.3 Trial Operation for Position Control from the Host Controller with the Servo Unit Used for Speed Control 85
4.4.4 Trial Operation for Position Control..... 86
4.5 Trial Operation with the servo motor Connected to the Machine.....87
4.6 Trial Operation of Servo Motor with Brake 88

4.1 Inspection and Precautions Before Trial Operation

To ensure safe and correct trial operation, check the following items before you start trial operation.

1) Inspection of the Servo Motor

Check and confirm the following items, and if any problem is found, please handle it properly before trial operation.

- Make sure that the setting and wiring are correct.
- Make sure that there are no loose parts in the servo motor mounting.

Note: If you are using a servo motor with an oil seal, make sure that the oil seal is not damaged. Also make sure that oil has been applied. If you are performing trial operation on a servo motor that has been stored for a long period of time, make sure that all servo motor inspection and maintenance procedures have been completed.

2) The Status of the Servo Unit

To ensure safe and correct trial operation, check the following items before you start trial operation.

- Make sure that the setting and wiring are correct.
- Make sure that the power supply voltage supplied to the servo unit is correct according to specifications

4.2 Trial Operation for Servo Motor

Please refer to Utility function Fn002 in Chapter 7 for trial operation of Servo motor

4.3 Origin Search Positioning (Fn003)

Origin search is a function to determine the origin pulse (phase C) position of the incremental encoder and stop at that position. This function is used when the motor shaft and mechanical need to be positioned.

Origin search can be performed under the following conditions.

- S-ON is not input.
- Parameter Pn50A.1≠7.

The motor speed at the time of execution is 60min-1.

Points

- Make sure that the load is not coupled when you execute an origin search
- The Forward Drive Prohibit (P-OT) signal and Reverse Drive Prohibit (N-OT) signal are disabled during an origin search.

Please refer to Utility function Fn003 in Chapter 7 for the operation

4.4 Trial Operation from Host Controller for Servo Unit without a Load

Please confirm the following items when performing a test run of the servo motor according to the instructions from the host.

- Make sure that the servo motor operation reference from the host controller to the servo unit and the I/O signals are set up properly.
- Make sure that the wiring between the host controller and serovo unit and the polarity of the wiring are correct.
- Make sure that the wiring between the host controller and servo unit and the polarity of the wiring are correct.

⚠ Caution

- Before you perform trial operation of the servo motor without a load for references from the host controller, make sure that there is no load connected to the servo motor (i.e., that all couplings and belts are removed from the servo motor) to prevent unexpected accidents.

4.4.1 Input Signal Connection and Parameter Settings

Please connect the input signal circuit required for test operation to the input and output signal interface (CN1). The following conditions need to be met for connection.

Modify the corresponding parameters:

Prohibition of forward drive (P-OT), prohibition of reverse drive (N-OT) input signal OFF (forward and reverse drive possible) .

Setting method: Input CN1-42, 43 as "ON" signal, or set "Pn50A.3=8, Pn50B.0=8" to disable the function of prohibiting forward rotation and reverse rotation .

If the encoder is an absolute encoder, there is no need to change the parameters, and if it is an incremental encoder, it is necessary to set " Pn002.2 =1".

If it is a single-phase electric input, then necessary to set " Pn00B.2 =1".

4.4.2 Trial Operation for Speed Control

Step	Operating Procedure	Reference
1	Confirm the power supply and input signal circuit again, and connect the control power supply and the main circuit power supply. And confirm that the speed command input (voltage between V-REF and SG) is 0V.	"2.12.2 Connection example for speed control "
2	Set the servo ON (/S-ON) input signal to ON. When the speed command input is 0V, but the servo motor rotates slightly, adjust the command offset so that the shaft does not rotate.	" 5.4.3 Adjustment of Speed Command Bias"
3	Gradually increase the speed command input from the host controller starting from 0 V The default setting is 6V/rated speed .	
4	Check the speed command value (Un001) .	
5	Check the motor speed(Un000) .	
6	Confirm that the speed command value (Un001) in steps 4 agrees with motor speed value (Un000) in step 5	
7	Change the speed command input voltage, and confirm that Un001 and Un000 are consistent. When Un001 and Un000 are inconsistent, please adjust the speed command input gain (Pn300).	" 5.4 Speed Control"
8	Confirm that the servo motor is operating in the correct direction Without changing the polarity of the analog speed command, to switch the direction of the motor, please refer to "5.2.2 Selection of direction of the motor".	" 5.3.4 Setting of Motor Rotation Direction"
9	Reduce the speed command input to 0V.	
10	Turn off the power supply. At this point, the test operation under speed control is over.	

4.4.3 Trial Operation for Position Control from the Host Controller with the Servo Drive Used for Speed Control

When performing position control with the host controller and speed control with the servo unit, please check the operation of the servo motor after performing "4.4.2 Trial Operation for Speed Control"

Step	Operate Procedure	Reference
1	Turn on the control power supply and the main circuit power supply of the servo unit.	
2	Set the servo ON (/S-ON) input signal to ON. When the speed command input is 0V, but the servo motor rotates slightly, adjust the command offset so that the shaft does not rotate.	" 5.4.3 Adjustment of Speed Command Offset"
3	To confirm the rotation speed of the servo motor, jogging then confirm the rotation speed through the motor speed monitoring (Un000). Example: Check whether it rotates 1 revolution per second at a speed command of 60 min-1. If there is a problem with the rotation speed of the servo motor, please confirm the following items and set it appropriately. • Setting value of speed input gain (Pn300) • The direction of rotation when forward rotation and reverse rotation commands are input	" 5.3.4 Setting of Motor Rotation Direction" "4.4.2 Trial Operation for speed control"
4	Execute the following type of simple positioning from the host controller and confirm the motion of the servo motor Input a reference to move the servo motor one rotation and confirm that the motor shaft moves one rotation. If there is a problem with the amount of rotation of the servo motor , please confirm the following items and make appropriate settings. • The setting value of encoder frequency division pulse number (Pn212) • The direction of rotation when forward rotation and reverse rotation commands are input	" 5.3.4 Setting of Motor Rotation Direction"
5	Reduce the speed command input to 0V .	
6	Turn OFF the servo. At this point, the test operation is over.	

4.4.4 Trial Operation for Position Control

The following describes the test operation method under position control. Here we introduce the trial operation steps after the input signal wiring for position control is completed (refer to "4.4.1 Input signal circuit connection and parameter settings").

Step	Operating Procedure	Reference
1	Set Pn200 to the reference pulse form of the host controller.	"5. 5 .1 Setup during position control"
2	Set the reference unit and set the electronic gear ratio (Pn20E and Pn210) according to the host controller.	" 5.5.4 Electronic Gear Ratio"
3	Turn on the control power supply and the main circuit power supply of the servo unit.	
4	Input the /S-ON (Servo ON) signal	" 5.4.3 Adjustment of Speed Command Offset"
5	Input a low-speed pulse reference from the host controller that is easy to check For safety, please set the command pulse speed around 100 min-1.	
6	Check the number of reference pulses that are input to the servo unit from the changes in the input reference pulse counter before and after the reference.	
7	Check the actual number of servo motor rotations from the changes in the feedback pulse counter before and after the reference.	
8	Confirm that the values from steps 7 and 8 satisfy the following equation. Un00D=Un00C X(Pn20E/Pn210)	
9	Confirm that the servo motor shaft is rotating in the direction specified by the command When switching the rotation direction of the motor without changing the polarity of the input pulse, please refer to "5.2.2 Selection of the	" 5.3.4 Setting of Motor Rotation Direction"

	rotation direction of the motor".	
10	Input a pulse reference for a comparatively large number of servo motor rotations from the host controller so that the servo motor will operate at a constant speed. For safety, please set the command pulse speed to about 100 / min.	
11	Check the reference pulse speed input to the servo unit with the input command pulse speed monitor(Un007[min-1]). Calculate Un007 [for 23-bit encoder] according to the following formula. Un007 (input command pulse speed) = input command pulse [pulse/s] × 60 × (Pn20E / Pn210) × (1/8388608)	
12	Confirm the motor speed (Un000[min-1]).	
13	Confirm that the values (Un007 and Un000) in steps 11 and 12 are the same.	
14	Stop the pulse command and turn off the servo. At this point, the test operation is over.	

4.5 Trial Operation with the servo motor Connected to the Machine

The following describes the test operation after connecting the servo motor to the machine. Make sure that the procedure Trial Operation from the Host Controller for the servo motor without a Load has been completed.

Caution

- Operating mistakes that occur after the servo motor is connected to the machine may not only damage the machine, but they may also cause accidents resulting in personal injury

Points

- If you disabled the overtravel function for trial operation of the servo motor without a load, enable the overtravel function (P-OT and N-OT signal) before you preform trial operation with the servo motor connected to the machine in order to provide protection.

Table 4-1 Trial Operation steps

Step	Operating Procedure	Reference
1	Turn on the control power supply and the main circuit power supply, and make settings for safety functions, overtravel, brakes, and other protective functions. • When using a servo motor with a brake, please implement measures to prevent the machine from falling or vibrating due to external force, and confirm that the action of the servo motor and the brake are normal.	"5. 3.5 Setting of Overtravel" "5.3.6 Brakes "
2	With the power OFF, connect the servo motor and the machine with a coupling, etc.	
3	After confirming that the servo unit is servo OFF, turn on the machine (host controller) power supply. And reconfirm whether the protection function set in step 1 works normally. (Note) In order to prevent abnormalities in the next operation, please make the devices in the state of emergency stop.	"5.3.7 How to stop the motor when the servo is OFF and an alarm occurs "
4	Confirm again that the parameter setting is consistent with each control mode, and then confirm whether the operation of the servo motor meets the machine operating specifications.	

5	If necessary, adjust the servo gain to improve the servo motor response characteristics. During the test operation, the servo motor and the machine may not be suitable. Therefore, let the system run for a sufficient amount of time	"Chapter 6 Tuning"

4.6 Trial Operation of Servo Motor with Brake

Please observe the following precautions for the test operation of the servo motor with brake.

• When performing a test operation of a servo motor with a brake, be sure to take measures to prevent the machine from falling naturally or vibrating due to external force in advance

• When performing a trial operation of a servo motor with a brake, first confirm the operation of the servo motor and the brake with the servo motor separated from the machine. If there is no problem, please connect the servo motor to the machine and perform a test operation again.

Please use the brake interlock output (/BK) signal of the servo unit to control the brake action of the servo motor with brake. Please refer to " 5.3.6 Brake " for wiring and related parameter setting .

Chapter 5 Application Function

Chapter 5 Application function 89

5.1 Precautions 92

5.2 Automatic Detection of Connected Motor 92

5.3 Basic Function Settings 92

5.3.1 Power Settings 92

5.3.2 Control Mode Selection 93

5.3.3 Enable 93

5.3.4 Setting Rotation Direction of Servo Motor 94

5.3.5 Overtravel Setting 96

5.3.6 Holding Brake 99

5.3.7 Motor Stopping Methods for Servo OFF and Alarms 101

5.3.8 Operation for Momentary Power Interruptions 103

5.3.9 Setting of Motor Overload Detection Value 104

5.3.10 Regenerative resistor capacity setting 104

5.4 Speed Control 105

5.4.1 Input specifications of Speed Command Signal 105

5.4.2 Setting of Speed Command Input Gain 105

5.4.3 Speed Command Offset Adjustment 106

5.4.4 Soft Start Settings 106

5.4.5 Speed Command Filter 107

5.4.6 Zero Clamping Function 108

5.4.7 Setting of Speed Coincidence Signal 109

5.5 Position Control 110

5.5.1 Basic Setting of Position Control 110

5.5.2 CLR Signal Settings 111

5.5.3 Command Pulse Input Multiplication Switching 112

5.5.4 Electronic Gear Ratio 113
5.5.5 Smooth Function 114
5.5.6 Positioning Completion Signal 114
5.5.7 Near signal 116
5.5.8 Command Pulse Inhibition Function 116
5.5.9 Encoder Divided Pulse Output 118
5.5.10 Multiturn Limit Settings 119
5.5.11 When an alarm (A.CC0) for the upper limit of the number of rotations is displayed 120
5.6 Torque Control 120
5.6.1 Input specifications of Torque Command Signal 120
5.6.2 Setting of Torque Command Input Gain 121
5.6.3 Torque Command Offset Adjustment 121
5.6.4 Torque Reference Filter Settings 122
5.6.5 Speed Limit during Torque Control 122
5.7 Internal Set Speed Control 124
5.7.1 Input Signals for Internal Set Speed Control 124
5.7.2 Selection of Internal Set Speed Control 124
5.7.3 Internal Set Speed Parameters 125
5.7.4 Changing Internal Set Speeds with Input Signals 125
5.7.5 Operating Example 125
5.8 Selecting Combined Control Methods 126
5.8.1 Switching between Internal Set Speed Control and Another Control Method (Pn000.1 = 4, 5,6) 126
5.8.2 Switching between Internal Set Speed Control and Another Control Method (Pn000.1 = 7 , 8 , 9) 129
5.8.3 Switching between Internal Set Speed Control and Another Control Method (Pn000.1 = A , B) 129
5.9 Selecting Torque Limits 129
5.9.1 Internal Torque Limits 129
5.9.2 External Torque Limits 130
5.9.3 Limiting Torque with an Analog Command 131
5.9.4 Limiting Torque with an External Torque Limit and an Analog Voltage Command 132
5.9.5 Torque Limit Detection Signal 133
5.10 Security Function 134
5.10.1 Hard wire Base Block (HWBB) Function 134
5.10.2 External Device Monitoring (EDM1) 138
5.10.3 Application Examples for Safety Functions 139
5.10.4 Validating Safety Functions 141
5.10.5 Safety Precautions When Using the Security Function 141
5.11 Absolute Encoder 141
5.11.1 Absolute Data Request (SENS_ON command) 142
5.11.2 Battery Replacement 142
5.11.3 Sequence for Reading and Outputting Position Data from Absolute Encoder 144
5.11.4 Resetting the Absolute Encoder (when an Alarm occurs) 147
5.12 Position comparison output function 148
5.12.1 Function Description 148

5.12.2 Related Objects..... 148
5.12.3 Function Running 149
5.13 Gravity Compensation 150
5.13.1 Required Parameters Settings..... 152
5.13.2 Operating Procedure for Gravity Compensation..... 152
5.14 Other input and output signals.....152
5.14.1 Input Signal Allocations 152
5.14.2 Alarm Output (ALM) Signal..... 152
5.14.3 Warning Output (/WARN) Signal 152
5.14.4 Alarm Reset (/ALM-RST) Signal 153
5.14.5 Rotation Detection Output Signal (/TGON)..... 153
5.14.6 Servo Ready Output (/S-RDY) Signal 153

5.1 Precautions

Table 5-1 Signal meaning table

Signal	Function
Danger	Indicates that may cause death or serious injury
Caution	Indicates that may cause injury or property damage

5.2 Automatic Detection of Connected Motor

When the servo unit is connected to a standard rotating motor, it will automatically determine which type of servo motor connected. Therefore, , you normally do not need to specify the servo motor type.

5.3 Basic Function Settings

5.3.1 Power Settings

1) AC/DC Power Input Setting

The servo unit supports AC/DC power input, which can be set by parameter Pn001 = n. □X□□ .

Table 5-2 Pn001 =n. □X□□ Parameter Setting Table

Parameter		Meaning	When Enabled	Classification
Pn001 (Function Select Application Switch 1)	n. □0□□ (default setting)	Use an AC power supply input:input AC power from L1, L2, L3 terminals	After restart	Setup
	n. □1□□	Use a DC power supply input.: directly input DC power from B1 to N or input DC power from P, N		

Note:1. When the set value is Pn001 = n.□X□□, if it is inconsistent with the actual power input specifications, A.330 (main circuit power supply wiring error) will occur .

2. Please connect the AC power supply to the L1/L2/L3 terminals and LC1/LC2 terminals of the servo unit .

3. Please connect the DC power supply to the B1 (P) terminal and N (N1) terminal of the servo unit, and connect LC1/LC2 to the AC power supply . Otherwise may result in malfunction or fire .

4. Always specify a DC power supply input (Pn001 = n.□1□□) before you input DC power for the main circuit power supply.

If you input DC power without specifying a DC power supply input (i.e., without setting Pn001 to n.□1□□), the servo unit' s internal elements may burn and may cause fire or damage to the equipment.

5. With a DC power supply input, time is required to discharge electricity after the main power supply is turned OFF. A high residual voltage may remain in the servo unit after the power supply is turned OFF. Be careful not to get an electric shock.

6. When DC power is input, please install a fuse on the power supply line.

7. The servo motor returns regenerative energy to the power supply. If you use a servo unit with a DC power supply input, regenerative energy is not processed. Process the regenerative energy at the power supply..

8. When using three-phase 220V Y7S series-□□□A with DC power input (□□□=040A, 075A, 100A, 150A, 200A), please connect an inrush current limiting circuit to build a standard power on and off sequence control.

9. When using three-phase 380V Y7S series-□□□T with DC power input (□□□=100T, 150T, 200T, 300T, 500T, 600T, 750T, 111T, 151T, 221T), please connect an inrush current limiting circuit to build a standard power on and off sequence control.

2) Single-phase/three-phase AC power input setting

Servo drive of 750W and below support single-phase AC power input, which can be set by parameter Pn00B = n.□X

□□.

Table 5-3 Pn00B =n. □X□□ Parameter Setting Table

Parameter		Meaning	When	Classification
Pn00B (Function selection application switch B)	n. □0□□ (default setting)	Use a three-phase power supply input.	After restart	Setup
	n. □1□□	Use a three-phase power supply input as a single-phase power supply input.		

Note:1. If you use a single-phase power supply input without specifying a single-phase AC power supply (Pn00B = n.□1□□), an A.F10 alarm (Power Supply Line Open Phase) will occur.

2. When using single-phase 220V power input, do not connect the L3 terminal .

5.3.2 Control Mode Selection

The servo unit can support position control, speed control, torque control, etc. through Pn000 = n. □□X□ to set.

Table 5-4 Pn000 =n. □□X□ Parameter Setting

Parameter		Meaning	When Enabled	Classification
Pn 000 (Function selection application switch 0)	n. □□0□	Speed control	After restart	Setup
	n. □□1□	Position control		
	n. □□2□	Torque control		
	n. □□3□	Internal set speed control		
	n. □□4□	Internal set speed control - speed control		
	n. □□5□	Internal set speed control - position control		
	n. □□6□	Internal set speed control - torque control		
	n. □□7□	Position Control - speed Control		
	n. □□8□	Position Control - torque Control		
	n. □□9□	Torque Control - speed Control		
	n. □□A□	Speed control - speed control with zero clamping		
	n. □□B□	Position control - position control with command pulse prohibition function		

5.3.3 Enable

The default setting CN1-40 pin is the motor enable signal, the input pin number can be changed by setting parameter Pn50A = n. □□ X □

Table 5-5 Pn50A= n. □□X□ Servo ON(/S-NO) Setting Table

Parameter		Meaning	When Enabled	Classification
Pn50A (input signal selection 1)	n.□□0□ (default setting)	Active when CN1-40 input signal is ON (closed)	After restart	Setup
	n.□□1□	Active when CN1-41 input signal is ON (closed)		
	n.□□2□	Active when CN1-42 input signal is ON (closed)		
	n.□□3□	Active when CN1-43 input signal is ON (closed)		
	n.□□4□	Active when CN1-44 input signal is ON (closed)		

	n.□□5□	Active when CN1-45 input signal is ON (closed)		
	n.□□6□	Active when CN1-46 input signal is ON (closed)		
	n.□□7□	The signal is always active		
	n.□□8□	The signal is always inactive		
	n.□□9□	Active when CN1-40 input signal is OFF (open)		
	n.□□A□	Active when CN1-41 input signal is OFF (open)		
	n.□□B□	Active when CN1-42 input signal is OFF (open)		
	n.□□C□	Active when CN1-43 input signal is OFF (open)		
	n.□□D□	Active when CN1-44 input signal is OFF (open)		
	n.□□E□	Active when CN1-45 input signal is OFF (open)		
	n.□□F□	Active when CN1-46 input signal is OFF (open)		

Note:1. Do not frequently switch the servo ON signal without inputting a command

2. When the servo ON signal is set to n.□□7□, the signal is always active, if the main circuit is powered on, and the PLC command is input at this time, unexpected actions may occur in the mechanical system, so please always take safety measures

3. When a resettable alarm has entered the servo-off state, it will automatically return to the servo-on state as long as the alarm is reset. If the servo ON signal is set to "7: set

Please be careful that the servo motor or mechanical system may operate unexpectedly if the alarm reset is executed in the state that the signal is fixed to be valid at all times .

5.3.4 Setting Rotation Direction of Servo Motor

The rotation direction of the servo motor can be reversed through Pn000.0 without changing the PLC command . This causes the rotation direction of the servo motor to change, but the polarity of the signals, such as encoder output pulses, output from the servo unit do not change.

Table 5-6 Pn000 Rotation Direction Selection

Parameter		Forward / Reverse Command	Motor Direction and Encoder Divided Pulse Outputs	Applicable Overtravel Signal(OT)
Pn000	n.□□□0 Use CCW as the forward direction. (default setting)	Forward command	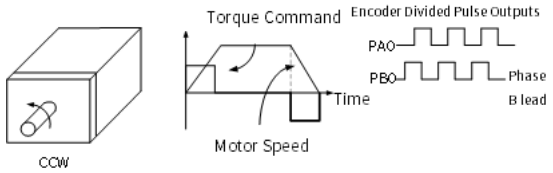	P-OT
		Reverse command	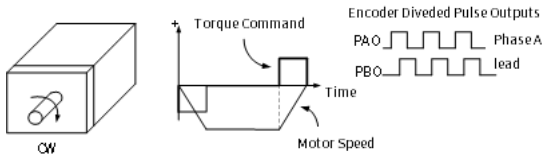	N-OT
	n.□□□1 Use CW as the forward direction. (Reverse Rotation Mode)	Forward command	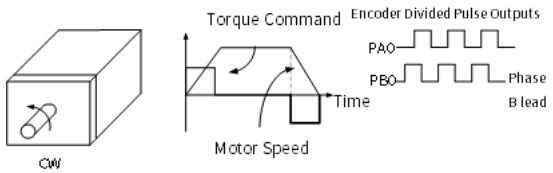	P-OT

		Reverse command	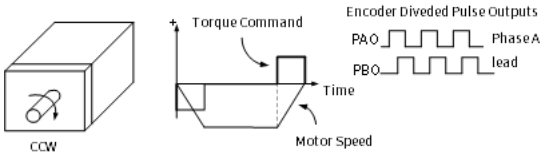	N-OT

Note: The "forward rotation direction" under the default setting is "counterclockwise rotation (CCW)" viewed from the load side of the servo motor

5.3.5 Overtravel Setting

Overtravel is a function of the servo unit that forces the servo motor to stop in response to a signal input from a limit switch that is activated when a moving part of the machine exceeds the safe range of movement.

For rotary applications such as round tables and conveyors, the overtravel function may not be required, and in this case, the input signal wiring for overtravel is also unnecessary.

⚠ Caution

· Limit Switch Installation

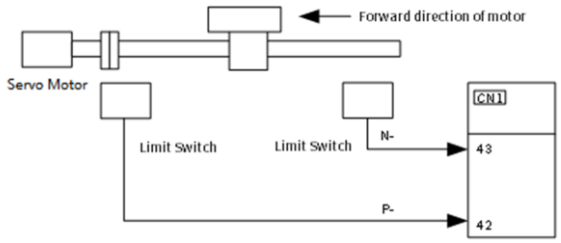

· Precautions when external force are applied to servo motor shaft during overtravel:

1. The /BK (Brake) signal will remain ON (i.e., the brake will be released) when overtravel occurs. This may result in the workpiece falling when overtravel occurs. To prevent the workpiece from falling, set Pn001 to n.□□1□ to place the servo motor in a zero-clamped state when it stops.
2. A base block state is entered after stopping for overtravel. This may cause the servo motor to be pushed back by an external force on the load shaft. To prevent the servo motor from being pushed back, set Pn001 to n. □□1□to place the servo motor in zero-clamped state when it stops.

Note: When the servo motor stops due to overtravel during position control, the position deviation is held. You must input the CLR (Clear) signal to clear the position deviation..

1) Forward overtravel (P-OT) signal setting

Table 5-7 Pn50A=n.X□□□ Forward Drive Overtravel（P-OT）Setting Table

Parameter		Meaning	When Enabled	Classification
Pn50A (Input signal selection 1)	n.0□□□	Enable forward drive when CN1-40 input signal is ON (closed)	After restart	Setup
	n.1□□□	Enable forward drive when CN1-41 input signal is ON (closed)		
	n.2□□□	Enable forward drive when CN1-42 input signal is ON (closed)		
	n.3□□□	Enable forward drive when CN1-43 input signal is ON (closed)		
	n.4□□□	Enable forward drive when CN1-44 input signal is ON (closed)		
	n.5□□□	Enable forward drive when CN1-45 input signal is ON (closed)		
	n.6□□□	Enable forward drive when CN1-46 input signal is ON (closed)		
	n.7□□□	Set the signal to always prohibit forward drive.		
	n.8□□□	Set the signal to always enable forward drive.		
	n.9□□□	Enable forward drive when CN1-40 input signal is OFF (open)		
	n.A□□□	Enable forward drive when CN1-41 input signal is OFF (open)		

	n.B□□□	Enable forward drive when CN1-42 input signal is OFF (open)		
	n.C□□□	Enable forward drive when CN1-43 input signal is OFF (open)		
	n.D□□□	Enable forward drive when CN1-44 input signal is OFF (open)		
	n.E□□□	Enable forward drive when CN1-45 input signal is OFF (open)		
	n.F□□□	Enable forward drive when CN1-46 input signal is OFF (open)		

2) Reverse drive overtravel (N-OT) signal setting

Table 5-8 Pn50B=n. □□□X Reverse Drive Overtravel（N-OT）Setting Table

Parameter		Meaning	When Enabled	Classification
Pn50B (Input signal selection 2)	n.□□□0	Enable reverse drive when CN1-40 input signal is ON (closed)	After restart	Setup
	n.□□□1	Enable reverse drive when CN1-41 input signal is ON (closed)		
	n.□□□2	Enable reverse drive when CN1-42 input signal is ON (closed)		
	n.□□□3	Enable reverse drive when CN1-43 input signal is ON (closed)		
	n.□□□4	Enable reverse drive when CN1-44 input signal is ON (closed)		
	n.□□□5	Enable reverse drive when CN1-45 input signal is ON (closed)		
	n.□□□6	Enable reverse drive when CN1-46 input signal is ON (closed)		
	n.□□□7	Set the signal to always prohibit reverse drive.		
	n.□□□8	Set the signal to always enable reverse drive.		
	n.□□□9	Enable reverse drive when CN1-40 input signal is ON (closed)		
	n.□□□A	Enable reverse drive when CN1-41 input signal is ON (closed)		
	n.□□□B	Enable reverse drive when CN1-42 input signal is ON (closed)		
	n.□□□C	Enable reverse drive when CN1-43 input signal is ON (closed)		
	n.□□□D	Enable reverse drive when CN1-44 input signal is ON (closed)		
	n.□□□E	Enable reverse drive when CN1-45 input signal is ON (closed)		
	n.□□□F	Enable reverse drive when CN1-46 input signal is ON (closed)		

3) Motor Stopping Method for Overtravel

When overtravel occurs, you can choose any of the following three methods to stop the servo motor through Pn001 :

Ⅰ . Dynamic brake (DB) stop: By short-circuiting the electrical circuit, the servo motor is stopped urgently.

Ⅱ . Deceleration to stop: Deceleration to stop by emergency stop torque.

Ⅲ . Coasting to stop stop: stop naturally due to friction when the motor rotates.

After stopping, there are the following two states:

Ⅰ . Coasting to stop status: The state of natural stop due to friction when the motor rotates.

II . Zero position fixed state: the state of maintaining the zero position in the position loop.

Table 5-9 Pn001=n. □□XX Reverse Drive Overtravel（N-OT）Setting Table

Parameter		Motor Stop Method	State after motor stops	When Enabled	Classification
Pn001 (Function Select Application Switch 1)	n.□□00 (default setting)	Dynamic brake	Coasting to stop	After restart	Setup
	n.□□01				
	n.□□02	Coasting to stop			
	n. □□1□	Slow down	Zero fixed		
	n.□□2□		Coasting to stop		

Note: Deceleration to stop is not possible in torque control. With the setting of Pn001.0, the status of servo motor is Coasting to stop after the servo motor stops performing DB or Coasting to stop.

When the motor stop method is selected as deceleration stop:

Set Pn406 (Emergency Stop Torque) to stop the servo motor by setting emergency stop torque, the default setting is 800%. and it will actually stop according to the maximum torque of the motor.

Table 5-10 Pn406 Deceleration Stop Setting Table

Pn406	Emergency Stop Torque Torque Speed Postion			When Enabled	Classification
	Setting Range	Setting Unit	Default Setting	Immediately	Setup
	0~800	1%	800%		

4) Overtravel Warning function

You can set the system to detect an A.9A0 warning (Overtravel) if overtravel occurs while the servo is ON. This allows the servo unit to notify the host controller with a warning even when the overtravel signal is input only momentarily. It can be set by Pn00D = n. X□□□.

Table 5-11 Pn00D=nX□□□ Overtravel Warning Setting Table

Parameter		Meaning	When Enabled	Classification
Pn00D (Function selection application switch D)	n.0□□□ (default setting)	Do not detect overtravel warnings	Immediately	Setup
	n.1□□□	Detect overtravel warnings		

■ Warning Detection Time

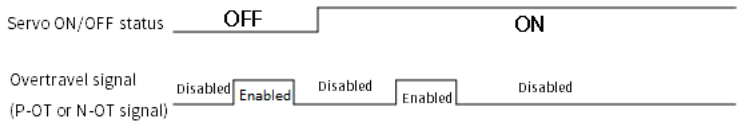

Figure 5-1 Overtravel Detected Timing Chart

Information:

1. Warnings are detected for overtravel in the same direction as the reference.
2. Warnings are not detected for overtravel in the opposite direction from the reference.
3. A warning can be detected in either the forward or reverse direction if there is no command.
4. A warning will not be detected when the servo is OFF even if overtravel status exists.

5.A warning will not be detected when the servo is turned ON even if overtravel status exists.

6. The warning status will be held for one second after the overtravel status no longer exists and it will then be cleared automatically.

Note: The overtravel warning function is only the action of detecting the warning. It will not affect the stop processing of the overtravel and the motion control of the PLC device. But the motor has not reached the PLC command position, so please check the PLC command .

5.3.6 Holding Brake

Since the gravity in the Z-axis direction will cause the mechanism to slide down, the holding brake is more often used in the Z-axis direction. Using the brake can prevent the moving part from falling down, and also prevent the servo motor from continuously exerting a large resistance (if the servo continues to exert force, a large amount of heat will be generated, which will reduce the service life of the motor). The electromagnetic brake will cause unnecessary malfunction, and the brake must be applied after the servo is turned off. The brake is controlled by DO (/BK signal), and the user can use Pn506 , Pn507 and Pn508 to set the relevant delay time.

The holding brake is used in the following cases:

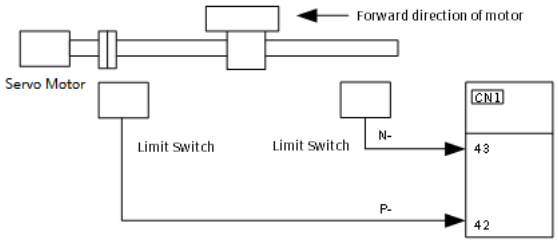

Figure 5-2 Cases for Holding Brake

Electromagnetic brake control timing chart :

Plese consider the brake release delay and set the parameters in the timing sequence as shown in the figure below

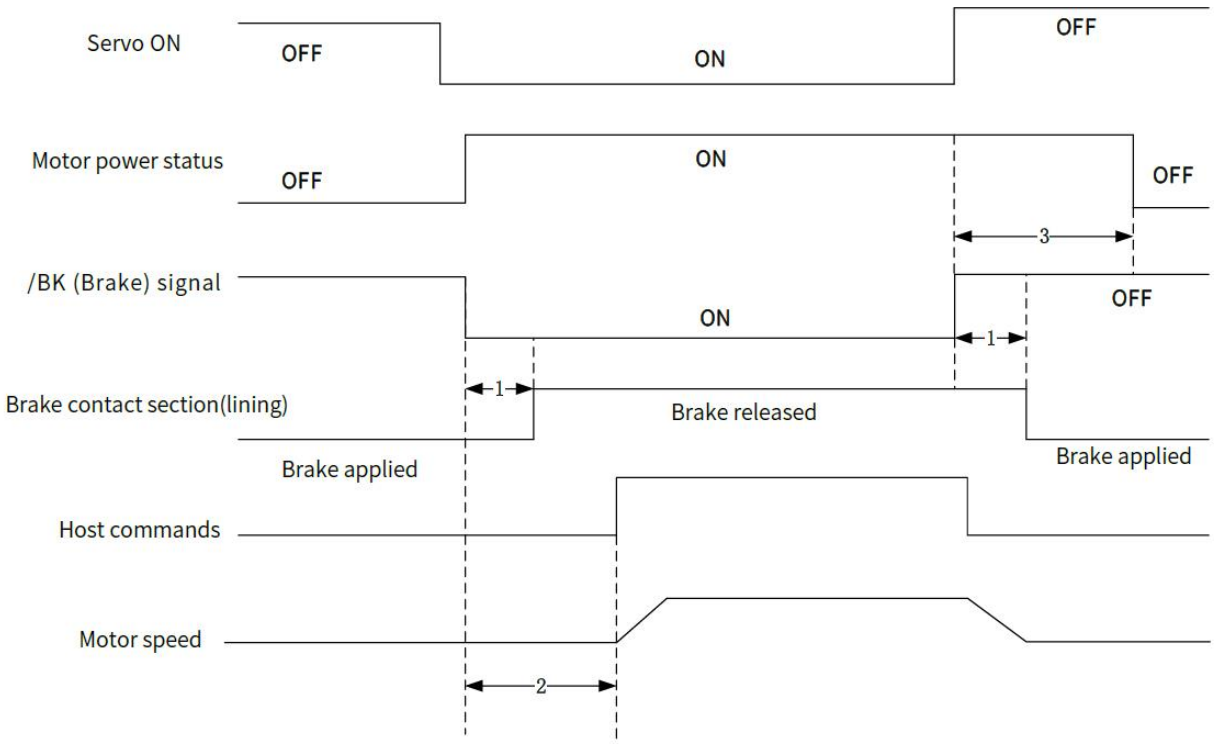

Figure 5-3 Electromagnetic Brake Timing Chart

Note:1. Before you output a reference from the host controller to the servo unit, wait for at least 50 ms plus the brake release delay time after you turn ON the /S-ON signal.

2. Please set the brake operate and servo OFF time through Pn506, Pn507 and Pn508 .

3. It can only be used for holding and not for braking. Please use it with the servo OFF .

1) Brake signal

Output signal to control the brake.The /BK (Brake) signal is not allocated by default.To use the brake, change the setting of (3)Braking signal(/BK) alPosition.

The /BK signal is turned OFF (to operate the brake) when the servo is turned OFF or when an alarm is detected.

The servo is ON , /BK will be ON (the brake does not operate)

Note: The /BK signal will remain ON during overtravel. The brake will not be applied.

The /BK (Brake) signal is not allocated by default. Please set with Pn50F= n.□X□□ to allocate

Table 5-12 Pn50F=n. □ X □□ Brake Signal (/ BK) Setting Table

Parameter		Connector Pin No.		Meaning	When Enabled	Classification
		+ Pin	- Pin			
Pn50F (Output Signal Selection 2)	n. □0□□ (default setting)	—	—	The /BK signal is not used.	After restart	Setup
	n. □1□□	C N1-25	C N1-26	The /BK signal is output from CN1-25 and CN1-26.		
	n. □2□□	C N1-27	C N1-28	The /BK signal is output from CN1-27 and CN1-28.		
	n. □3□□	C N1-29	C N1-30	The /BK signal is output from CN1-29 and CN1-30		
	n. □4□□	C N1-37	C N1-38	The /BK signal is output from CN1-37 and CN1-38		

Note: If you allocate more than one signal to the same output connector pin, a logical OR of the signals is output. Allocate the /BK signal to its own output connector pin, i.e., do not use the same output terminal for another signal.

2) Output timing of brake signal (/BK) (when the motor stops)

When the servo motor stops, the brake (/BK) signal and the servo ON (/S-ON) signal are OFF at the same time . By setting Pn506 , the time from the servo ON (/S-ON) signal OFF to the motor actually entering the non-energized state can be changed.

Table 5-13 Pn506 Brake Singnal (/BK) Setting Table

Pn 506	Brake command - Servo OFF delay time Speed Position Torque			When Enabled	Classification
	Setting range	Setting unit	default setting	Immediately	Setup
	0~50	10ms	10		

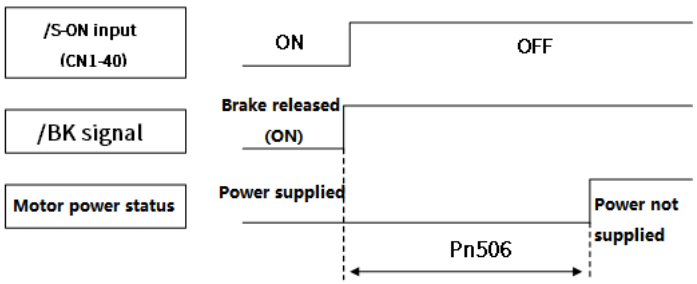

Figure 5-4 Brake Signal (/BK) Output Timing Chart(Servo motor stops)

Note:1. When the servo motor is used to control a vertical axis, the machine moving part may move slightly due to gravity or an external force. You can eliminate this slight motion by setting the servo OFF delay time so that power supply to the motor is stopped after the brake is applied.

2. When an alarm occurs, the servo motor immediately enters a unpowered state regardless of the setting. Therefore, due to the self-weight or external force of the mechanical moving part, the machine sometimes will move before the brake operates.

3) Output timing of brake signal (/BK) (when the motor is operating)

If an alarm occurs while the servo motor is operating, the servo motor will start stopping and the /BK signal will be turned OFF. You can adjust the timing of /BK signal output by setting the brake command output speed level Pn507 and the servo OFF-Brake Command Waiting Time (Pn508).

Note: The stop method when the alarm occurs is the setting of the electronic gear. After the motor is stopped by the zero-speed command, follow the output sequence of " 5.3.6 (2) Brake signal (/BK) (when motor is stopped)" .

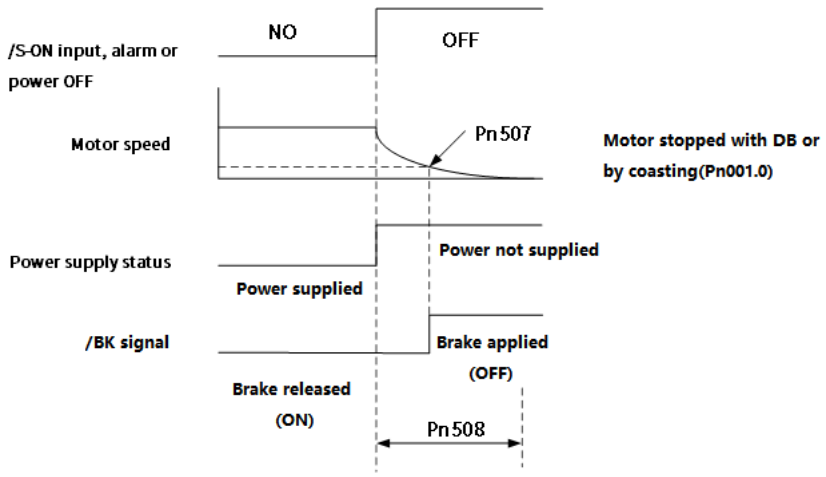

Figure 5-5 Signal Brake（/BK）Output Timing Chart(When motor is operating)

The brake operates when either of the following conditions is satisfied:.

1. When the motor speed goes below the level set in Pn507 for a servo motor after the power supply to the motor is stopped

2. When the time set in Pn508 elapses after the power supply to the motor is stopped

Table 5-14 Pn507/ Pn508 Brake Operating Table

Pn507	Brake Command Output Speed Level Speed Position Torque			When Enabled	Classification
	Setting range	Setting unit	Default setting	Immediately	Setup
	0-10000	1 min $^{-1}$	100		
Pn508	Servo OFF-Brake Command Waiting Time Speed Position Torque			When Enabled	Classification
	Setting range	Setting unit	Default setting	Immediately	Setup
	10-100	10ms	50		

5.3.7 Motor Stopping Methods for Servo OFF and Alarms

⚠ Caution

- The dynamic brake is used for emergency stops. The dynamic brake circuit will operate frequently if the power supply is turned ON and OFF or the servo is turned ON and OFF while a reference input is applied to start and stop the servo motor. This may result in deterioration of the internal elements in the servo unit. Use speed input references or position references to start and stop the servo motor.
- If you turn OFF the main circuit power supply or control power supply during operation before you turn OFF the servo, the servo motor stopping method depends on the servo unit model as shown in the following table.
- If the servo motor must be stopped by coasting rather than with the dynamic brake when the main circuit power supply or the control power supply is turned OFF before the servo is turned OFF, combine the sequence signals externally to disconnect the wiring (U, V, W) of the servo motor.
- To minimize the coasting distance of the servo motor to come to a stop when an alarm occurs, zero-speed stopping is the default method for alarms to which it is applicable. However, depending on the application, stopping with the dynamic brake may be more suitable than zero-speed stopping.

1) Stopping Method for Servo OFF

Table 5-15 Pn001 Stopping Setting Table(When servo is OFF)

Parameter		Servo Motor Stop Method	Status After the Servo Motor Stops	When Enabled	Classification
Pn001 (Function Select Application Switch 1)	n.□□□0 (default setting)	DB	DB	After restart	Setup
	n.□□□1		Coasting to stop		
	n.□□□2	Coasting to stop	Coasting to stop		

2) Stopping method for Alarms

According to the stop method when the alarm occurs, there are two types of alarms BM. 1 and BM. 2 which are selected by Pn001.0 and Pn00B.1.

When BM.1 alarm occurs, the servo motor will stop according to the setting of Pn001.0

When BM.2 alarm occurs, the servo motor will stop according to the setting of Pn00B.1.

Please refer to the following tables to check BM.1 alarm or BM.2 alarm.

Table 5-16 Parameter Setting Table when BM.1 Alarm Occurs(Same as Servo

Parameter		Servo Motor Stop Method	Status After the Servo Motor Stops	When Enabled	Classification
Pn001 (Function Select Application Switch 1)	n. □□□0 (default setting)	DB	DB	After restart	Setup
	n. □□□1		Coasting to stop		
	n. □□□2	Coasting to stop	Coasting to stop		

able 5-17 Parameter setting Table when BM.2 Alarm Occurs

Parameter		Servo Motor Stop Method	Status After the Servo Motor Stops	When Enabled	Classification
Pn00B	Pn001				
n.□□0□ (default setting)	n.□□□0 (default setting)	zero speed	DB	After restart	Setup
	n.□□□1		Coasting to stop		
	n.□□□2				
n.□□1□	n.□□□0 (default setting)	DB	DB		
	n.□□□1		Coasting to stop		
	n.□□□2	Coasting to stop			

5.3.8 Operation for Momentary Power Interruptions

Even if the main power supply to the servo unit is interrupted momentarily, power supply to the motor (servo ON status) will be maintained for the time set in Pn509 (Momentary Power Interruption Hold Time).

Table 5-18 Pn509（Momentary Power Interruption Hold time) Setting Table

Pn509	Momentary Power Failure Holding Time Speed Position Torque			When Enabled	category
	Setting range	Setting unit	Default setting	Immediately	Setup
	20-50000	1ms	20		

If the momentary power interruption time is equal to or less than the setting of Pn509, power supply to the motor will be continued. If it is longer than the setting, power supply to the motor will be stopped Power will be supplied to the motor again when the main circuit power supply recovers

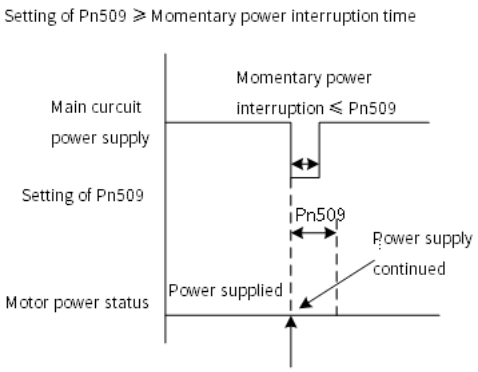

Figure 5-6 Main Circuit Power Supply and Servo Motor Power Status（Pn509 value≥momentary power interruption time)

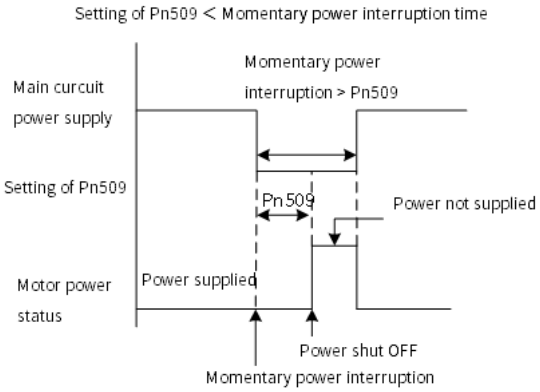

Figure 5-6 Main Circuit Power Supply and Servo Motor Power Status（Pn509 value≤momentary power interruption time)

Points:

1. If the momentary power interruption time exceeds the setting of Pn509, the /S-RDY (Servo Ready) signal will turn OFF and servo is OFF.

2. If uninterruptible power supplies are used for the control power supply and main circuit power supply, the servo unit can withstand a power interruption that lasts longer than 1,000 ms.

3. The holding time of the servo unit control power supply is approximately 100 ms. If control operations become impossible during a momentary power interruption of the control power supply, the setting of Pn509 will be ignored and the same operation will be performed as for when the power supply is turned OFF normally.

When performing the same operation, the setting of Pn509 will be ignored.

5.3.9 Setting of Motor Overload Detection Value

The motor overload detection value is the value (threshold value) at which an overload warning and an overload alarm are detected when a continuous load exceeding the rated value of the servo motor is applied.

It prevents the servo motor from overheating.

The servo unit is able to change the detection time of A.910 (overload warning) and A.720 (overload (continuous maximum) alarm). However, the detection value of A.710 (overload characteristics and overload (instantaneous maximum) alarm) cannot be changed .

Detection time of overload warning (A.910)

With the default setting for overload warnings, an overload warning is detected in 20% of the time required to detect an overload alarm. You can change the time required to detect an overload warning by changing the setting of the overload warning level (Pn52B). You can increase safety by using overload warning detection as an overload protection function matched to the system.

For example, if the overload warning value (Pn52B) is changed from 20% to 50% , an overload warning is detected in half of the time required to detect an overload alarm.

Table 5-19 Pn52B (Overload Warning Level) Setting Table

Pn52B	Overload Warning Level Speed Position Torque			When Enabled	Classification
	Setting range	Setting unit	Default setting	Immediately	Setup
	1 ~ 100	1%	20		

Detection Timing for Overload Alarms (A.720)

If servo motor heat dissipation is insufficient (e.g., if the heat sink is too small), you can lower the overload alarm detection level to help prevent overheating.

To reduce the overload alarm detection level, change the setting of Pn52C (Base Current Derating at Motor Overload Detection).

Table 5-20 Pn52C（Base Current Derating at Motor Overload Detection） Setting Table

Pn52C	Base Current Derating at Motor Overload Detection speed Position torque			When Enabled	Classification
	Setting range	Setting unit	Default setting	After restart	Setup
	10 ~ 100	1%	100		

An A.720 alarm (Continuous Overload) can be detected earlier to protect the servo motor from overloading.

5.3.10 Regenerative Resistor Capacity Setting

If an External Regenerative Resistor is connected, you must set Pn600.

If you set Pn600=0 with external regenerative resistor connected, A.320 alarms (Regenerative Overload) will not be detected correctly, and the External Regenerative Resistor may be damaged or personal injury or fire may result

Table 5-21 Pn600 (Regenerative Resistor Capacity) Setting Table

Pn600	Regenerative Resistor Capacity Speed Position Torque			When Enabled	Classification
	Setting range	Setting unit	default setting	Immediately	Setup
	0 - Servo unit’ s maximum applicable motor capacity	10W	0		

The setting of regenerative resistance capacity depends on the way of external cooling.

1. For self-cooling(natural convection cooling): Set the parameter to a maximum 20% of the capacity (W) of the actually installed regenerative resistor.

2. For forced air cooling: Set the parameter to a maximum 50% of the capacity (W) of the actually installed regenerative resistor.

(Example)For a self-cooling 50-W External Regenerative Resistor, set Pn600 to 1 (×10 W) (50 W ×

20% = 10 W).

Note:1. When an External Regenerative Resistor is used at the normal rated load ratio, the resistor temperature increases to between 200° C and 300°C. Always apply derating. Consult the manufacturer for the resistor' s load characteristics.

2. For safety, use an External Regenerative Resistor with a thermoswitch.

5.4 Speed Control

Select speed control through Pn000.1 .

Table 5-22 Speed Control Mode Selection Table

Parameter		Meaning	When Enabled	Classification
Pn000	n.□□0□	Speed Control	After restart	Setup

5.4.1 Input specifications of Speed Command Signal

Motor speed is proportional to voltage. Maximum input voltage DC ± 1 0V .

Table 5-23 Speed Command Signal Input Specifications

Type	Signal	Connector Pin No.	Meaning
m	V-REF	CN1-5	Speed command input signal
	S G	CN1-6	Signal ground for speed command input signal

Note:1. When Pn300=006.00:6V , the motor is rated speed. (Default setting) .

2. The value of Pn300 is "600", but displays "006.00" .

5.4.2 Setting of Speed Command Input Gain

Use Pn300 to set the analog voltage value of the speed command (V-REF) that makes the speed of the servo motor equal to the rated value.

Table 5-24 Pn300 Parameter Setting Table

Pn300	Speed Command Input Gain Speed Position Torque			When Enabled	Classification
	Setting range	Setting unit	Default setting	Immediately	Setup
	150-3000	0.01V	600 (6.00V)		

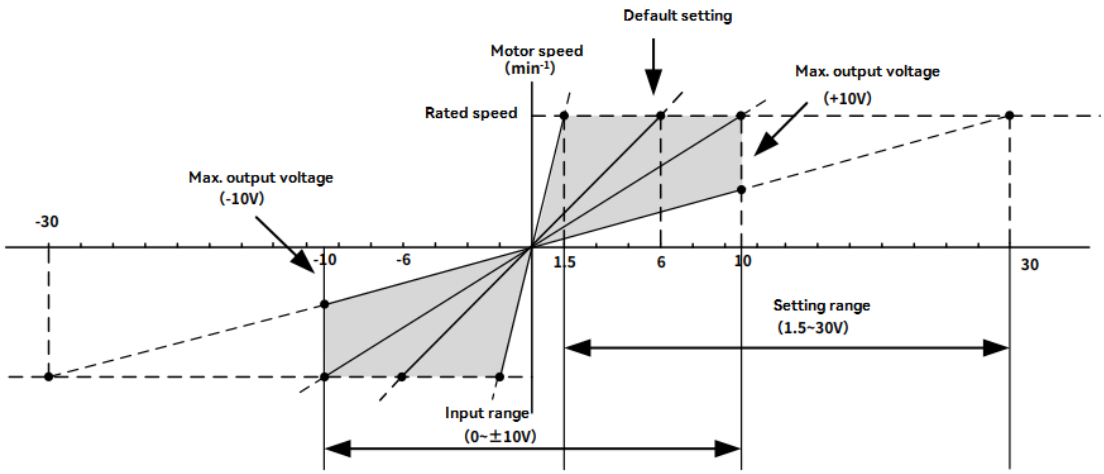

Figure 5-8 Speed Command Input Gain Setting

5.4.3 Speed Command Offset Adjustment

With speed control, the servo motor may sometimes rotate at a very low speed for a speed reference of 0V.

The offset needs to be eliminated by adjusting the offset. You can adjust the speed reference offset either automatically(Fn009) or manually(Fn00A).

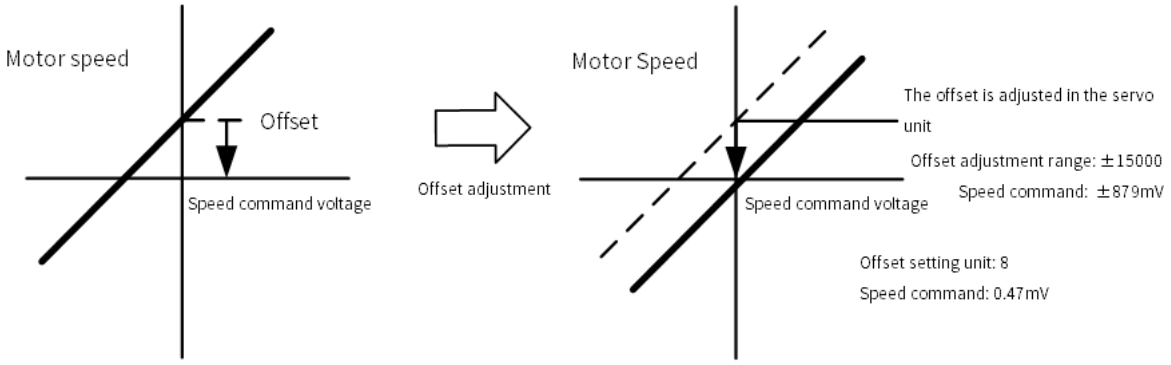

Figure 5-9 Speed Command Offset Adjustment

Note: Adjustments are required in the following cases:

1. The parameter writing prohibition function (Fn010) is not set to "prohibit writing" .

2. Servo is in ready state and OFF state

Fn009, Fn00A operation process is as follows:

Operation steps of automatic adjustment of command offset (Fn009):

(1) Confirm that the servo is OFF, input a 0-V reference voltage from the host controller or an external circuit.

(2) Press on the panel Ⓜ key to select the utility function Fn000, and the panel displays " FN000 " .

(3) Press the Ⓐ or Ⓥ key , the panel displays " FN009 ".

(4) Press the key Ⓢ for about 1 second, the panel displays " REF_o ".

(5) After pressing the key Ⓜ , after the panel donE flashing, it displays " REF_o " after around 1 second

(6) Press the key Ⓢ for about 1 second, the panel displays " FN009 "

Operation steps of Manual adjustment command offset (Fn00A):

(1) The servo is in the ready state.

(2) Press on the panel key Ⓜ to select the Utility function Fn000, and the panel displays " FN000 " .

(3) Press the Ⓐ or Ⓥ key ,the panel displays " FN00A ".

(4) Press the key Ⓢ for about 1 second, the panel displays " = SPd ", (when it is set to prohibit writing, the panel will display " no_oP " will flash for about 1 second. Please set it to the writable state through Fn010).

(5) Make the servo ON from the outside, and the panel will display " - SPd "

(6) Press the key Ⓢ for about 1 second, the panel will display the current offset value, for example " 00000 ".

(7) Press the Ⓐ or Ⓥ key to adjust the motor to stop. This value is the offset.

(8) Press Ⓢ key, the panel flashes " donE , then switch to " - SPd ".

(9) Press Ⓢ key, it will return to display " FN00A ".

5.4.4 Soft Start Settings

The soft start function takes a stepwise speed command input and applies the specified acceleration/deceleration rates to convert it to a trapezoidal speed reference. Acceleration time and deceleration time can be set.

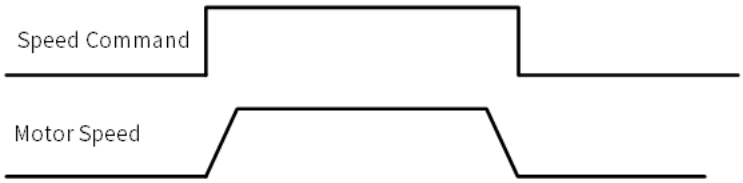

Figure 5-10 Soft Start Speed Command and Servo Motor Rate

Table 5-25 Soft Start Parameter Setting Table

Pn 305	Soft Start Acceleration Time		Speed	When Enabled	Classification
	Setting range	Setting unit	Default setting	Immediately	Setup
	0-10000	1ms	0		
Pn 306	Soft Start Deceleration Time		Speed	When Enabled	Classification
	Setting range	Setting unit	Default setting	Immediately	Setup
	0-10000	1ms	0		

Pn305 : The time required for the servo motor to accelerate from a stopped state to the maximum motor speed.

Pn306 : The time required for the servo motor to decelerate from the maximum motor speed to a stopped state.

The actual acceleration and deceleration time is calculated by the following formula.

$$\text{Actual acceleration time} = \frac{\text{Target speed}}{\text{Maximum speed}} \times \text{Soft start(Acceleration speed Pn305)}$$

$$\text{Actual deceleration time} = \frac{\text{Target speed}}{\text{Maximum speed}} \times \text{Soft start(Acceleration speed Pn306)}$$

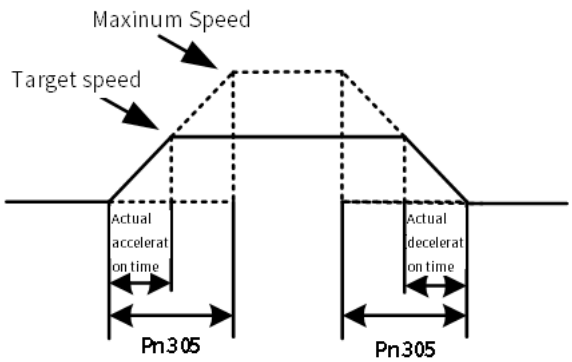

Figure 5-11 Pn305, Pn306 command Acceleration/Deceleration time

5.4.5 Speed Command Filter

The speed command filter is a first order lag filter that is applied to the V-REF (Speed Command Input) signal to smooth the speed command.

Note:It is normally not necessary to change this parameter. If the setting is too high, the response to the speed reference may be slowed down.

Table 5-26 Speed Command Filter Time Constant Parameter Setting

PPn307	Speed Command Filter Time Constant		Speed Position Torque	When Enabled	Classification
	Setting range	Setting unit	Default setting	Immediately	Setup
	0-65535	0.01ms	40		

5.4.6 Zero Clamping Function

Zero clamping is used to lock the servo when the input voltage of the V-REF signal is equal to or lower than the speed set for the zero clamping level (Pn501 or Pn580) while the /ZCLAMP or /P-CON(Zero Clamping) signal is ON. Zero clamping is used for speed control in systems in which the host controller does not form a position loop.

The servo motor is clamped within one pulse of the position where zero clamping was applied, and will return to the zero clamping position even if it is moved by an external force.

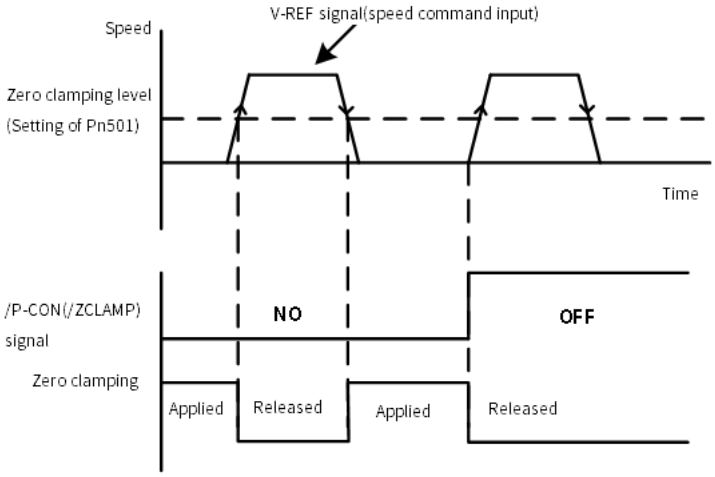

Figure 5-12 Speed Command（V-REF）Input Voltage is Lower than the Speed set for the Zero Clamping Level Timing Chart

Table 5-27 Zero Clamping Level Parameter Setting

Pn501	Zero Clamping Level		Speed	When Enabled	Classification
	Setting range	Setting unit	Default setting	Immediately	Setup
	0-10000	1 min^{-1}	10		

Note:If you set a value that exceeds the maximum speed of the servo motor, the actual speed will be limited to the maximum speed of the servo motor.

1) When Using the Default Input Signal Allocations (Pn 50A.0=0)

If the zero claming is used in the default setting state, please set Pn000.1 = A and use the /P-CON signal as the zero clamping signal

Table 5-28 /P-CON Signal Zero Clamping Table

Type	Signal	Connector Pin No.	Signal status	Meaning
Input	/P-CON	CN1-41 (Default setting)	ON (Closed)	Zero clamping is applied if the input voltage of the V-REF signal is equal to or lower than the speed set for the zero clamping level(Pn501)
			OFF (Open)	Zero clamping is disabled.

Table 5-29 Speed Contorl Zero Clamping Parameter Setting

Parameter		Meaning	When Enabled	Classification
Pn000 (Function Rotary Basic Switch 0)	n.□□A□	Speed Control - Speed control with zero clamping	After restart	Setup

2) When Changing Input Signal Allocations (Pn 50A.0=1)

You must allocate the /ZCLAMP signal to use zero clamping

Table 5-30 /ZCLAMP Signal Zero Clamping Table

Type	Signal	Connector Pin No.	Signal Status	Meaning
Input	/ZCLAMP	Must be allocated	ON (Closed)	Zero clamping is applied if the input voltage of the V-REF signal is equal to or lower than the speed set for the zero clamping level (Pn501).
			OFF (Open)	Zero clamping disabled

When using the zero clamp fixed function, please set Pn000.1 to one of 0 , 3 , 4 , 5 , 6, 7, 9, A.

Table 5-31 Control Method Parameter Setting under Zero Clamping

Parameter		Meaning	When Enabled	Classification
Pn000 (Function Rotary Basic Switch 0)	n.□□0□	Speed control	After restart	Setup
	n.□□3□	Internal set speed control		
	n.□□4□	Internally set speed control - speed control		
	n.□□5□	Internal set speed control-position control		
	n.□□6□	Internal set speed control-torque control		
	n.□□7□	Position control-speed control		
	n.□□9□	Torque control-speed control		
	n.□□A□	Speed control - Speed control with zero clamping		

Note:During speed control, by setting Pn50D.0 =7 (zero clamp fixed function is always valid), the zero clamp fixed state will always be maintained at a speed below the zero clamp fixed value. no input required signal (/ZCLAMP, /P-CON) .

5.4.7 Setting of Speed Coincidence Signal

The speed coincidence signal (/V-CMP) is output when s output when the servo motor speed is the same as the reference speed

Table 5-32 Speed Coincidence Signal Setting

Type	Signal	Connector Pin No.	Signal Status	Meaning
Output	/V-CMP	CN1-25,26(default setting)	ON (Closed)	The speed coincides.
			OFF (Open)	The speed does not coincide.

Table 5-33 Speed Coincidence Signal Parameter Setting

	Speed Coincidence Detection Signal Output Width speed			When Enabled	category
Pn503	Setting range	Setting unit	Default setting	Immediately	Setup
	0-100	1 min^{-1}	10		

The signal is output when the difference between the reference speed and motor speed is equal or less than the setting.

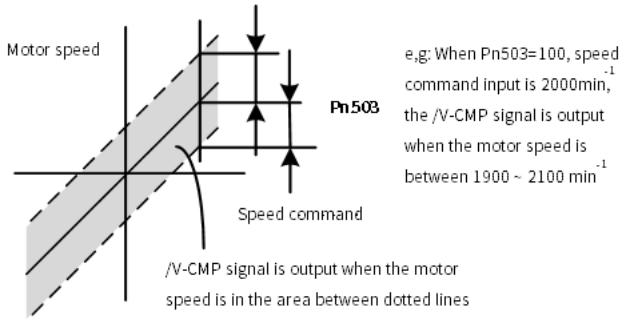

Figure 5-13 Speed Coincidence Signal Output

5.5 Position Control

Positioning function controlled by pulse command.

Set the control method to position control in Pn000 = n.□□X□

Table 5-34 Position Control Selection

Parameter		Meaning	When Enabled	Classification
Pn000 (Function Rotary Basic Switch 0)	n.□□1□	Position Control	After restart	Setup

5.5.1 Basic Setting of Position Control

1) Command Pulse Form

The form of command pulse is set by (Pn200 = n. □□□ X).

Table 5-35 Pulse Command Form Pn200 = n. □□□X Parameter

Parameter		Command Pulse Form	Input Pulse Multiplier	Forward Command	Reverse Command
Pn200	n. □□□0 (Default setting)	Sign + pulse train (positive logic)	-	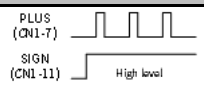	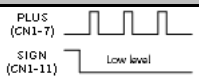
	n. □□□1	CW + CCW pulse trains (positive logic)	-	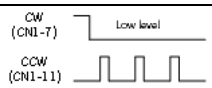	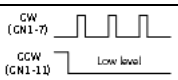
	n. □□□2	90°phase phase-differential pulses	x1	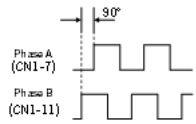	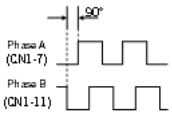
	n. □□□3		x2		
	n. □□□4		X4		
	n. □□□5	sign + pulse train (negative logic)	-		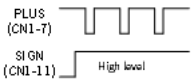
	n. □□□6	CW + CCW pulse trains (negative logic)	-	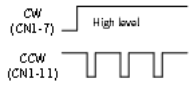	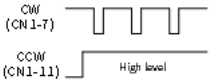

2) Selecting an Input Filter

Table 5-36 Filter Selection Pn200 = n. X□□□ Parameter

Parameter	Meaning	When Enabled	Classification

Pn200 (Position control command form selection switch)	n. 0□□□ (default setting)	Use the command input filter 1 for a linedriver signal. (1 Mpps max.)	After restart	Setup
	n. 1□□□	Use the command input filter for an open collector signal. (200 kpps max.)		
	n. 2□□□	Use command input filter 2 for a line-driver signal. (1 to 4 Mpps)		

Note:1 . Open collector pulse input: frequency not exceeding 200KHz, pulse width not less than 2.5us .

2. Differential pulse input: frequency not exceeding 500KHz, pulse width not less than 1us .

3. Differential high-speed pulse input: frequency not exceeding 4MHz, pulse width not less than 125ns .

4 . Please wait more than 40ms from the servo ON to the input of the pulse input, the pulse may not be received within 40ms .

3) Electrical Specifications for Pulse Train Command

Table 5-37 Electrical Specifications of Pulse Train Command

Pulse Train Command Form	Electrical Specifications		Remark
Sine + pulse train command (SIGN+PLUS signal) Maximum command frequency: 4 Mpps (Maximum frequency for open collector output is 200 kpps)	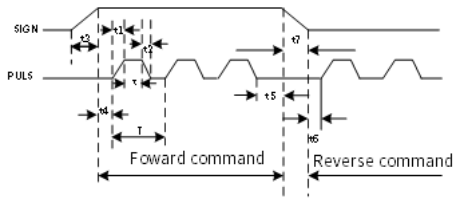	t1, t2, t3, t7≤0.025μs t4, t5, t6 ⩾ 0.5μs τ⩾ 0.125μs T-τ⩾ 0.125μs	SIGN is high for A forward reference and low for a reverse reference.
CW + CCW pulse train command (SIGN+PLUS signal) Maximum command frequency: 4 Mpps (Maximum frequency for open collector output is 200 kpps)	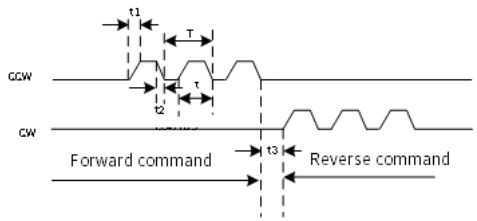	t1 , t2 ⩽ 0.025 μs t3 ⩾ 0.5 μs τ⩾ 0.125 μs T - τ⩾ 0.125 μs	-
Two-phase pulse trains with 90° phase differential (phases A and B) Maximum command frequency: 1Mpps* (Maximum frequency for open collector output is 200 kpps)	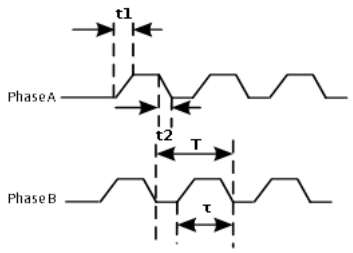	t1 ⩽ 0.1 μs t3 ⩾ 0.1 μs τ⩾ 0.5 μs T - τ⩾ 0. 5 μs	The command pulse form is set by Pn 200.0

Note:*: The maximum reference frequency for the multipliers before multiplication are as follows:

×1 multiplier: 1 Mpps

×2 multiplier: 1 Mpps

×4 multiplier: 1 Mpps

5.5.2 CLR Signal Settings

The CLR signal is used to clear the deviation counter in the servo unit.

Table 5-38 CLR Signal Input

Type	Signal	Connector Pin No.	Meaning
Input	CLR	CN1-15	Position deviation clear input
	/CLR	CN1-14	

1) Setting the Form of the CLR Signal

Table 5-39 CLR Signal Command Parameter Settings

Parameter		Command Form	Clear Timing	When Enabled	Classification
Pn200 (Position control command form selection switch)	n. □□0□ (Default setting)	Clear position deviation when the signal is at high level.	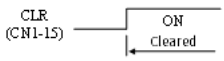	After restart	Setup
	n. □□1□	Clear position deviation on the rising edge of the signal.			
	n.□□2□	Clear position deviation when the signal is at low level.			
	n. □□3□	Clear position deviation on the falling edge of the signal.	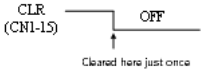		

Note:1 . As long as the CLR signal is ON, the deviation counter will be 0, so a position loop will not be formed.

2. If Pn200 = n.□□X□ is set to 0 or 2, the width of the CLR signal must be at least 250us to reset the deviation counter.

3. If Pn200 = n.□□X□ is set to 1 or 3, the width of the CLR signal must be at least 20us to reset the deviation counter.

2) Selection of Clear Operation

The parameter determines when to clear the position deviation by setting Pn200 = n.□X□□.

Table 5-40 Clear Position Deviation Timing Selection Settings

Parameter		Meaning	When Enabled	Classification
Pn200 (Position control command form selection switch)	n.□0□□ (Default setting)	Clear position deviation at a base block (at servo OFF or when alarm occurs).	After restart	Setup
	n.□1□□	Do not clear position deviation. The position deviation is cleared only with CLR (Clear Position Deviation) signal.		
	n.□2□□	Clear position deviation when an alarm occurs.		

5.5.3 Command Pulse Input Multiplication Switching

You can switch the input multiplier for the position command pulses with the /PSEL signal. The number of reference pulses input to the servo unit is multiplied by the reference pulse input multiplier. You can change the multiplier from 1 to a specified value n (n can be up to 100).You can confirm if the multiplier was changed with the /PSELA signal.

Table 5-41 Command Pulse Input Multiplication Switching

	Command Pulse Input Multiplication Position			When Enabled	Classification
Pn218	Setting range	Setting unit	Default setting	Immediately	Setup
	1-100	1	1		

Note:1. Always use the /PSELA signal to confirm that the reference pulse input multiplier has been switched and make sure that there are no position reference pulses before you input a position reference. Otherwise, position deviation and unexpected movement may occur.

2. Be sure to input the pulse after checking the command pulse input multiplication output signal (/PSELA)

3. The command pulse input multiplier will not change during program jogging and auto-tuning .

1) Command Pulse Input Multiplication Timing Chart

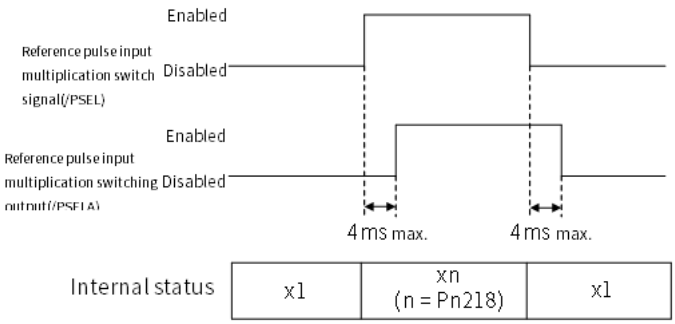

Figure 5-14 Command Pulse Input Multiplication Timing Chart

2) Input signal setting

When using the command pulse input multiplication switching function, please use the /PSEL signal.

Table 5-42 Command Pulse Input Multiplication Switching

Type	Signal	Connector Pin No.	Signal Status	Meaning
Input	/PSEL	Must be allocated	ON (closed)	The command pulse input multiplier was enabled.
			OFF (open)	The command pulse input multiplier was disabled.

5.5.4 Electronic Gear Ratio

The electronic gear is used to convert the travel distances that are specified in command units to pulses, which are required for actual movements. Pulses for each signal can be calculated. It is set by Pn20E and Pn210

Table 5-43 Electronic Gear Ratio Settings

Pn20E	Electronic Gear Ratio numerator Position			When Enabled	Classification
	Setting range	Setting unit	Default setting	After restart	Setup
	1-1073741824	—	1A.330		
Pn210	Electronic gear ratio denominator Position			When Enabled	Classification
	Setting range	Setting unit	Default setting	After restart	Setup
	1-1073741824	—	1		

If the gear ratio between servo motor shaft and the load is given as n/m :

$$\text{Electronic gear ratio}\frac{B}{A}=\frac{Pn20E}{Pn210}=\frac{\text{Encoder resolution}}{\text{Travel distance per load shaft revolution(reference units)}}\times\frac{m}{n}$$

The encoder resolution can be checked by the motor model as follows:

X6 series-□□□□□□□□□

Table 5-44 Encoder Resolution Selection Table

Code	Specification	Encoder Resolution
A	17-bit absolute type (multi-turn)	131072 (2^{17})
D.	23-bit absolute type (multi-turn)	8388608 (2^{23})

Note: Electronic gear ratio setting range: 0.001 ⩽ electronic gear ratio (B/A) ⩽ 4000, if it is not within the range, "parameter setting abnormality (A.040) alarm" will occur .

5.5.5 Smooth Function

Apply a filter to the pulse input command to make command smoother

Table 5-45 Pn216, Pn217 Filter Command Table

Pn 216	Position Reference Acceleration/Deceleration Time Constant Position			When Enabled	Classification
	Setting range	Setting unit	Default setting	Immediately after the motor stops	Setup
	0-65535	0.1ms	0		
Pn 217	Position command moving average time Position			When Enabled	Classification
	Setting range	Setting unit	default setting	Immediately after the motor stops	Setup
	0-10000	0.1ms	0		

Pn216 and Pn217 functions are as follows:

Table 5-46 Timing difference between Pn216 and Pn217

Acceleration and Deceleration Filter	Average Movement Filter
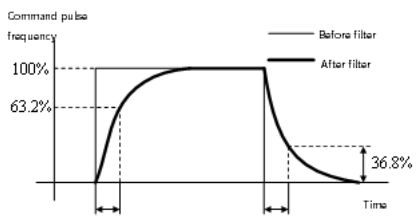	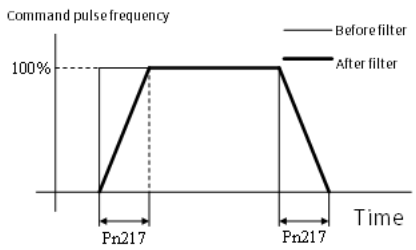
	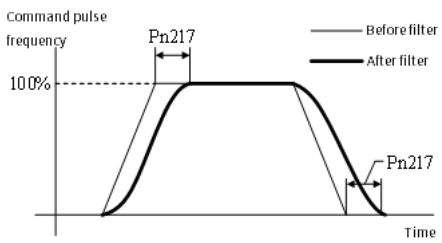

5.5.6 Positioning Completion Signal

The /COIN signal is output when the difference between the reference position output by the host controller and the current position of the servo motor is equal to or less than the setting of the positioning completed width (Pn522), indicating that servo motor positioning has been completed during position control.

Table 5-47 Positioning Completion Signal Input

Type	Signal	Connector Pin No.	Signal Status	Meaning
Input	/COIN	CN1-25,26	ON (closed)	Positioning has been completed
			OFF (open)	Positioning has not been completed

Table 5-48 Positioning Completion Signal Parameter Setting

Pn522	Positioning Completed Width		Position	When Enabled	category
	Setting range	Setting unit	Default setting	Immediately	Setup
	1-1073741824	1 command unit	7		

Note:1. No effect on final positioning accuracy.

2. If the parameter is set to a value that is too large, the /COIN signal may be output when the position deviation is low during a low-speed operation. Please set this parameter in a reasonable range..

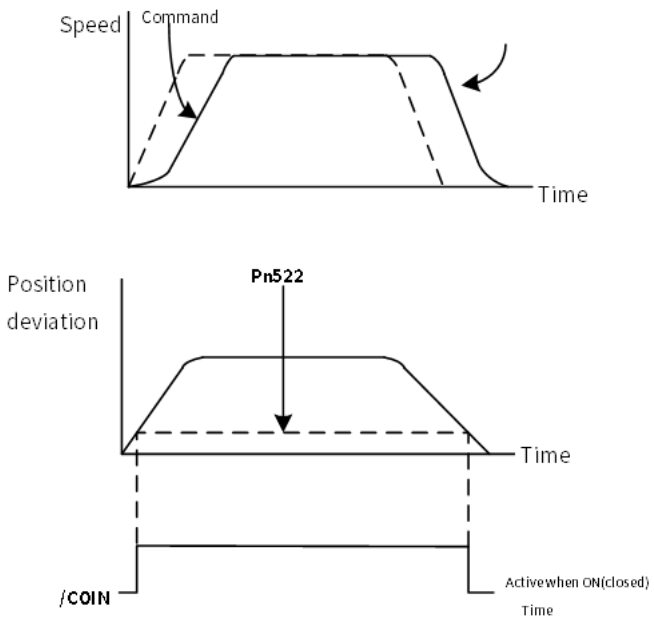

Figure 5-15 /COIN Signal Output Timing Chart

If the position deviation is always low and a narrow positioning completed width is used, change the setting of Pn207.3

Table 5-49 /COIN Output Timing Parameter Setting

Parameter		Signal	Meaning	When Enabled	Classification
Pn207 (Position control command form selection switch)	n.0□□□ (default setting)	/COIN signal output time	Output the /COIN signal when the absolute value of the position deviation is the same or less than the setting of Pn522	After restart	Setup
	n.1□□□		Output the /COIN signal when the absolute value of the position deviation is the same or less than the setting of Pn522 and the command after the position command filter is 0.		
	n. 2□□□		Output the /COIN signal when the absolute value of the position deviation is the same or less than the setting of Pn522 and the command input is 0.		

5.5.7 Near signal

The host controller receives the NEAR signal before it receives the /COIN signal, it can start preparations for the operating sequence to use after positioning has been completed. This allows you to reduce the time required for operation when positioning is completed.

Table 5-50 Near Signal

Type	Signal	Connector Pin No.	Signal Status	Meaning
Input	/NEAR	Must be allocated	ON(closed)	The servo motor has reached a point near to positioning completion.
			OFF(open)	The servo motor has not reached a point near to positioning completion

Table 5-51 Near Signal Parameter Setting

	Near Signal Width		Position	When Enabled	category
Pn524	Setting range	Setting unit	Default setting	Immediately	Setup
	1-1073741824	1 command unit	1073741824		

This signal is output when the number of PLC command pulses and the deviation of the servo motor are lower than the set value . Normally, set Pn524 to a value that is larger than the setting of Pn522.

5.5.8 Command Pulse Inhibition Function

The command pulse prohibition function means that in position control, when this function is enabled, the servo unit will ignore the reference pulse input

1) When Using the Default Input Signal Allocations (Pn 50A.0=0)

If the command pulse inhibition function is used in the default setting state, please set Pn000.1 = B and use the /P-CON signal as the command pulse inhibition signal.

Table 5-52 Command Pulse Counting Function

Type	Signal	Connector Pin No.	Signal status	Meaning
Input	/P-CON	CN-41 (default setting)	ON (closed)	Counting of command pulses is stopped.
			OFF (open)	The command pulses are counted

Table 5-53 Command Pulse Counting Parameter Setting

Parameter		Meaning	Signal	When Enabled	Classification
Pn000 (Function Rotary Basic Switch 0)	n.□□B□	Position control - position control with command pulse inhibition function	/P-CON	After restart	Setup

Note:Setting Pn000.1 = B, /P-CON signal can only be used for command pulse inhibition function .

2) When Changing Input Signal Allocations (Pn 50A.0=1)

If you set Pn000 = n.□□X□ to 1, 5, 7, 8, or B, the /INHIBIT signal is used as the command pulse inhibit signal for command pulse inhibition..

Table 5-54 Command Pulse Counting Function

type	name	connection terminal	output status	meaning
enter	/INHIBIT	Must be allocated	ON (closed)	Counting of stop command pulses
			OFF (disconnect)	Start command pulse count

Table 5-55 Command Pulse Counting Pn000= n. □□X□ Parameter Setting

Parameter		Meaning	When Enabled	Classification
Pn000 (Function Rotary Basic Switch	n.□□1□	Position control	After restart	Setup
	n.□□5□	Internal set speed control-position		

0)		control		
	n.□□7□	Position Control-Speed Control		
	n.□□8□	Position Control-Torque Control		

5.5.9 Encoder Divided Pulse Output

The encoder divided pulse output is a signal that is output from the encoder and processed inside the servo unit. It is then output externally in the form of two phase pulse signals (phases A and B) with a 90° phase differential. At the host controller, it is used as the position feedback.

Table 5-56 Encoder Divided Pulse Output

Type	Signal	Connector Pin No.	Meaning	Remarks
Output	PAO	CN1-33	Encoder Divided Pulse Output, Phase A	The amount of pulses per revolution of the motor set by Pn212 .
	/PAO	CN1-34		
	PBO	CN1-35	Encoder Divided Pulse Output, Phase C	
	/PBO	CN1-36		
	PCO	CN1-19	Encoder Divided Pulse Output, Phase C	
	/PCO	CN1-20		

1) Output Form

Forward rotation (Phase B leads by 90° lead)	Reversing rotation(Phase A leads by 90°leading)
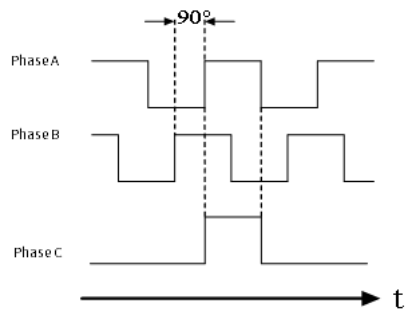	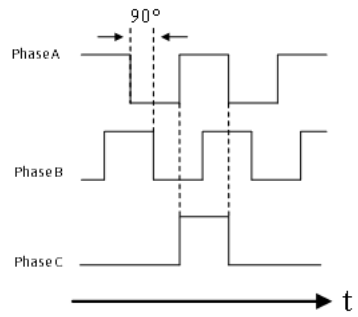

Note:1.The pulse width of the origin within one encoder rotation depends on the setting of number of encoder output pulses (Pn212). It is the same as the width of phase A

2. Even for reverse operation (Pn000 = n.□□□1), the output phase form is the same as shown above.

3. If you use the servo unit' s phase-C pulse output for an origin return, rotate the servo motor two or more rotations before you start an origin return. If the servo motor cannot be rotated two or more times, perform an origin return operation at a motor speed of 600 min-1 or lower. If the motor speed is higher than 600 min-1, the phase-C pulse may not be output correctly.

2) Setting for the Encoder Divided Pulse Output

Table 5-57 Encoder Divided Pulse Output Parameter Setting

	Encoder Divided Pulse		Position speed torque	When Enabled	category
Pn212	Setting range	Setting unit	Default setting	After restart	Setup
	16-16383	1P /Rev	2048		

The number of pulses from the encoder per rotation are processed inside the servo unit, divided by the setting of Pn212, and then output.

Set the number of encoder divided output pulses according to the system specifications of the machine or host controller.

The setting of the number of encoder output pulses is limited by the resolution of the encoder

Note: Encoder divided pulse setting :

1. Pn212 value< encoder resolution , otherwise "divided pulse output setting abnormality (A.041)" will occur .
2. The upper limit of pulse frequency is about 1.6Mpps. An A.511 alarm (Encoder Output Pulse Overspeed) will occur if the upper limit of the motor speed is exceeded

Output example: when Pn212=16

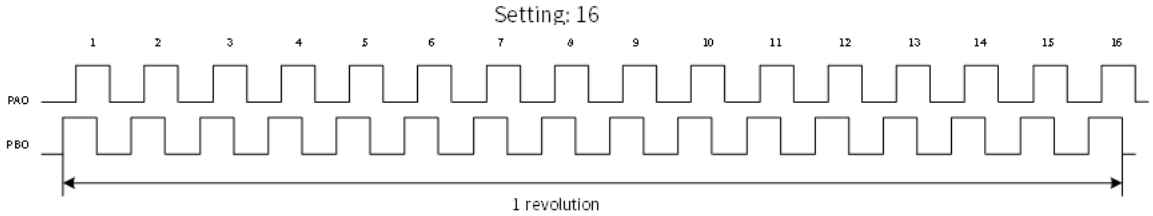

Figure 5-16 Encoder Divided Pulse when Pn212=16

5.5.10 Multiturn Limit Settings

The multiturn limit is used in position control for a turntable or other rotating body.

For example, consider a machine that moves the turntable shown in the following diagram in only one direction..

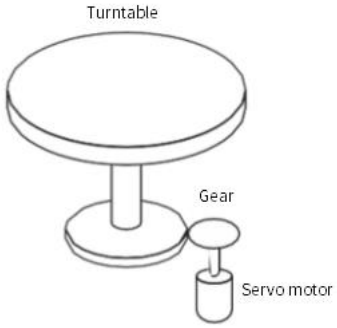

Figure 5-17 Moving Turntable in One Direction

Because the turntable moves in only one direction, the upper limit to the number of rotations that can be counted by an absolute encoder will eventually be exceeded. The multiturn limit is used in cases like this to prevent fractions from being produced by the integer ratio of the number of servo motor rotations and the number of turntable rotations.

For a machine with a ratio of n:m between the number of servo motor rotations and the number of turntable rotations, as shown above, the value of m minus 1 will be the setting for the multiturn limit setting (Pn205).

Multiturn limit (Pn205) = m-1

If m=100 and n=3, the relationship between the number of servo motor rotations and the number of turntable rotations would be as shown below

Set " 99 " in Pn205 .

Pn205 = 100-1 = 99 .

Table 5-58 Multiturn Limit Paramater Setting

Pn205	Multiturn limit Position Speed Torque			When Enabled	category
	Setting range	Setting unit	Default setting	After restart	Setup
	0-65535	1Rev	65535		

This setting is only enabled when using an absolute encoder. The data will change as shown below when this parameter is set to anything other than the default setting.

I If the servo motor operates in the reverse direction when the multiturn data is 0, the multiturn data will change to the value set in Pn205.

II If the motor operates in the forward direction when the multiturn data is at the value set in Pn205, the multiturn data will change to 0. Please set the value one less than required multiturn data.

Default Setting	Non-default Setting
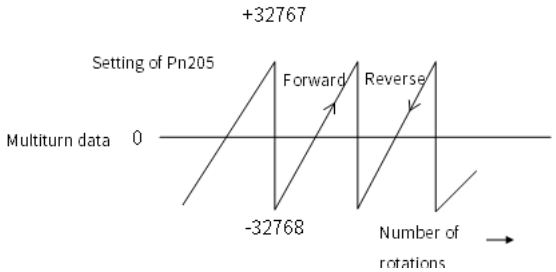	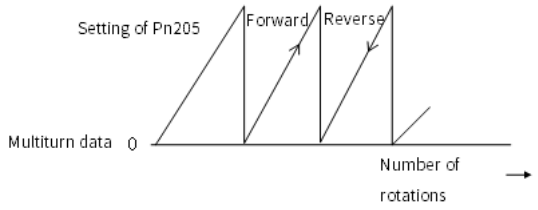

5.5.11 When an alarm (A.CC0) for the upper limit of the number of rotations is displayed

If you change the multiturn limit in Pn205, an A.CC0 alarm will be displayed because the setting disagrees with the value in the encoder.

Table 5-59 Multiturn Limit Disagreement Alarm(A.CC0)

Display	Name	Alarm Code Output			Meaning
A.CC0	Multiturn Limit Disagreement	AL01	AL02	AL03	Different multiturn limits are set in the encoder and servo unit
		0N(L)	0FF(H)	0N(L)	

If this alarm is displayed, use the following procedure to change the multiturn limit in the encoder to the same value as the setting of Pn205.

(1) Press on the panel Ⓜ key to select the Utility function Fn000, and the panel displays "FN000".

(2) Press the Ⓐ or Ⓥ key , the panel displays "FN013".

(3) Press the key Ⓢ for about 1 second, the panel displays "PGSEt".

(4) Press the key Ⓜ to make the multiturn limit of the absolute encoder same with the set value of Pn205 , and the panel will display "donE" flashes for about 1 second.

(5) After "donE" flashing, it returns and the panel display " PGSEt".

(6) Press the key Ⓢ for about 1 second, return to the Utility function and the panel display "FN013".

(7) In order to enable the settings, please reconnect the power supply of the servo unit.

5.6 Torque Control

Select torque control through Pn000.1 .

Table 5-60 Torque Command Signal Input Specifications

Parameter		Meaning	When Enabled	Classification
Pn000	n.□□2□	Torque Control	After restart	Setup

5.6.1 Input specifications of Torque Command Signal

The torque of the servo motor is controlled in proportion. Maximum input voltage: ±10 VDC

Table 5-61 Torque Command Input Signal

Type	Signal	Connector Pin No.	Meaning
Input	T-REF	CN1-9	Torque command input signal
	SG	CN1-10	Signal ground for torque reference input.

Note:1. Pn400 is set to 3 (setting unit: V) by default.

2. The value of Pn300 is "30", but the panel displays "0003.0" .

5.6.2 Setting of Torque Command Input Gain

The reference voltage for the rated motor torque is set in Pn400 to define the relationship between the analog voltage reference and the motor output torque.

Table 5-62 Torque Command Input Gain Parameter Setting

	Torque Command Input Gain torque		Position speed	When Enabled	Classification
Pn400	Setting range	Setting unit	Default setting	Immediately	Setup
	10-100	0.1V	30 (3.0V)		

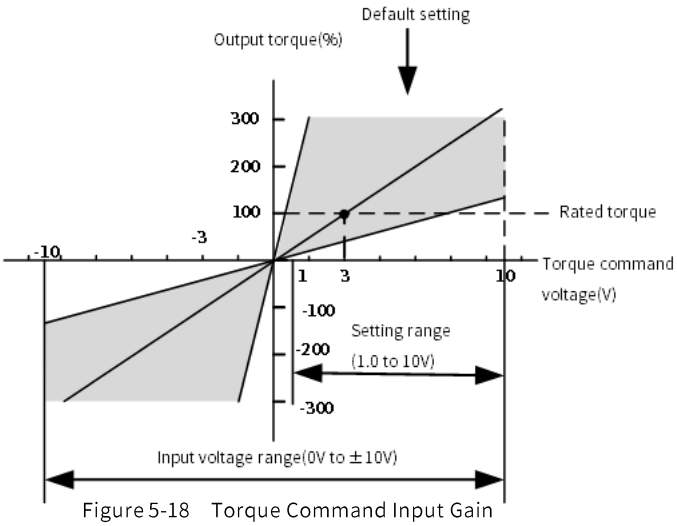

Figure 5-18 Torque Command Input Gain

Note: The motor outputs a torque that exceeds the rated torque for a long time, A.710 (instantaneous Overload) or A.720 (continuous Overload) alarms may occur.

5.6.3 Torque Command Offset Adjustment

With torque control, the servo motor may sometimes operate at a very low speed for a torque reference of 0 V

If the servo motor moves at a very low speed, the offset needs to be eliminated by adjusting the offset automatically

or manually

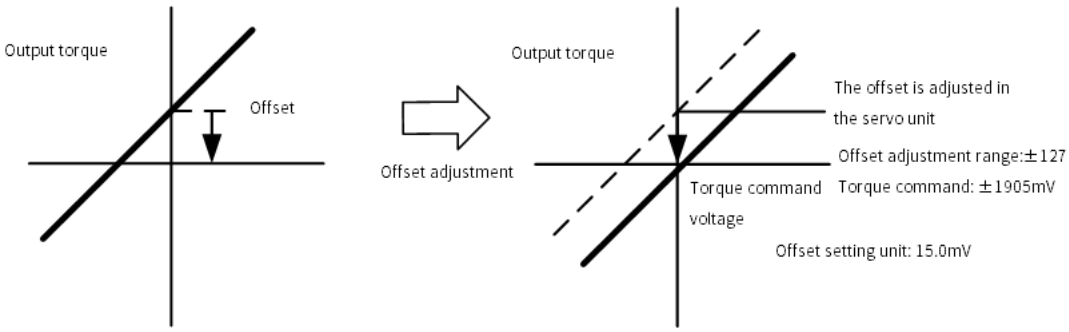

Figure 5-19 Torque Command Offset Adjustment

Note:The following conditions must be met to adjust the command offset.

1. The parameters must not be write prohibited
2. The servo must be in ready status and OFF.

Fn009, Fn00A operation process is as follows:

Operation Steps of Automatic Adjustment of Command Offset (Fn009):

(1) Input a 0-V reference voltage from the host controller or an external circuit..

(2) Press on the panel Ⓜ key to select the Utility function Fn000, and the panel displays "FN000" .

(3) Press the Ⓐ or Ⓥ key , the panel displays "FN009".

(4) Press the key Ⓢ for about 1 second, the panel displays " "· Ref_o

(5) After pressing the key Ⓢ , the panel displays "donE"After flashing for about 1 second, the panel displays " Ref_o ".

(6) Press the key Ⓢ for about 1 second, return to the Utility function panel and display "FN009".

Manually adjust command offset (Fn00B) operation steps:

(1) Press on the panel Ⓜ key to select the Utility function Fn000, and the panel displays "FN000" .

(2) Press the Ⓐ or Ⓥ key , the panel displays "FN00b".

(3) After pressing the key Ⓢ, the panel displays "= trq". (When it is set to prohibit writing, the panel will display "no_oP" flashes for about 1 second . Please set it to the writable state through Fn010)

(4) Turn the servo ON , the panel displays "~ trq".

(5) Press the key Ⓢ for about 1 second to display the current offset value .

(6) Press the Ⓐ or Ⓥ key to adjust the offset .

(7) After pressing the key Ⓢ , the panel displays "donE" flashing, then switches to display"~ trq".

(8) Press the key Ⓢ for about 1 second, return to the Utility function panel and display "FN00b".

5.6.4 Torque Command Filter Settings

Note:Normally, there is no need to change it, if the setting is too high, the response to the torque reference may be slowed down

Table 5-63 T-REF Filter Time Constant Parameter Setting

Pn415	T-REF Filter Time Constant		Position speed torque	When Enabled	Classification
	Setting range	Setting unit	Default setting	Immediately	Setup
	0-65535	0.01ms	0		

5.6.5 Speed Limit during Torque Control

During Torque Control, the the machine torque output is constant. Therefore the speed of the servo motor may increase greatly. In this case, use this function to limit the speed.

Unlimited Speed	Limited Speed
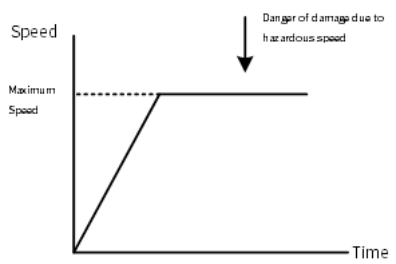	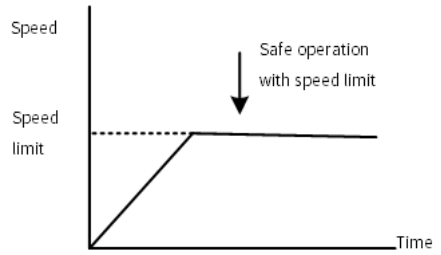

Note:According to the load condition of the motor, there will be a certain gap between the limit speed of the motor and the set value.

1) Speed Limit Output Signal

When the motor speed is limited, the output signal is as follows.

Tbale 5-64 Servo Motor Speed Limit Signal Output

Type	Signal	Connector Pin No.	Output Status	Meaning
Output	/VLT	Must be allocated	ON (closed)	Servo motor speed is being limited
			OFF (Open)	Servo motor speed is not being limited

2) Selecting the Speed Limit

The speed limit is set through Pn002.1 .

Table 5-65 Speed Limit Parameter Setting

Parameter		Meaning	When Enabled	Classification
Pn002	n.□□0□ (Default setting)	Use Pn407 as the speed limit. (Use internal speed limiting.)	After restart	Setup
	n.□□1□	Use V-REF (CN1-5 and CN1-6) as an external speed limit input signal and limit the speed with the V-REF input voltage and the setting of Pn300. (Use external speed limiting.)		

Internal Speed Limiting:

If you select internal speed limiting for the torque control option, set the speed limit for the motor in Pn407.

Also set Pn408to specify using the maximum motor speed or the overspeed alarm detection speed as the speed limit. Select the overspeed alarm detection speed to limit the speed to the equivalent of the maximum motor speed.

Table 5-66 Speed Limiting during Torque Control Parameter Setting

Pn407	Speed Limit during Torque Control torque			When Enabled	category
	Setting range	Setting unit	Default setting	Immediately	Setup
	0-10000	1 min $^{-1}$	10000		

Note: If the set value exceeds the maximum speed of the servo motor used, the actual speed will be limited to the maximum speed of the servo motor or the overspeed alarm detection speed.

Table 5-67 Internal Speed Limiting during Torque Control Parameter Setting

Parameter		Meaning	When Enabled	Classification
Pn408	n.□□0□ (default setting)	Use the smaller of the maximum motor speed and the setting of Pn407 as the speed limit.	After restart	Setup
	n.□□1□	Use the smaller of the overspeed alarm detection speed and the setting of Pn407as the speed limit.		

2) External Speed Limiting:

If you select external speed limiting for the torque control option, set the V-REF signal and the speed reference input gain (Pn300).

During torque control, the motor speed limit is controlled by analog command.

Table 5-68 External Speed Limiting Input

Type	Signal	Connector Pin No.	Meaning
Input	V-REF	CN1-5	External speed limit input
	SG	CN1-6	Signal ground for external speed limit input

Note:1. If you set Pn002=1, the smaller of the speed limit input with the V-REF signal and the value of Pn407 is used.

2. The setting of Pn300 determines the voltage level to be input as the speed limit. The polarity has no effect.

3. If you set Pn300 to 6.00 (default setting) and 6 V is input to the V-REF (CN1-5 and CN1-6) signal, the speed is limited to the rated

speed of the servo motor.

Table 5-69 Speed Command Input Gain

Pn300	Speed Command Input Gain Position speed torque			When Enabled	category
	Setting range	Setting unit	Default setting	Immediately	Setup
	150-3000	0.01V	600 (6.00V)		

5.7 Internal Set Speed Control

Motor speeds can be set in the 3 internal parameters of the servo unit, and select the speed and rotation direction through external input signals for speed control operation without PLC .

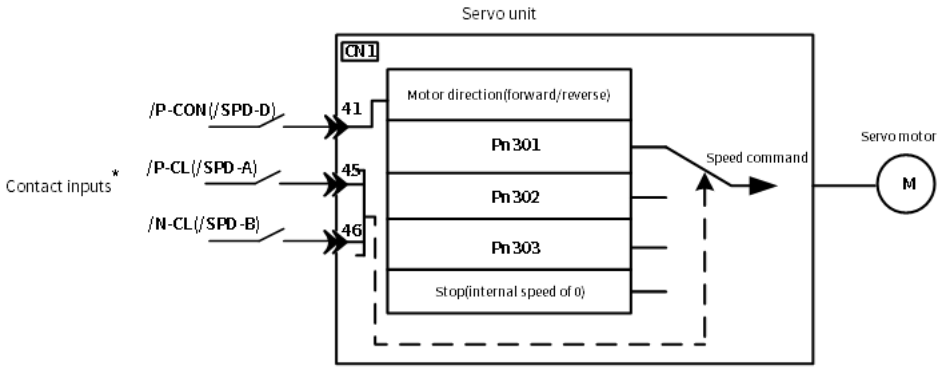

Figure 5-20 Internal Set Speed Control

Note: * In the internal speed mode, the input source of the command is determined by the external input signal SPD-D , /SPD-A , /SPD-B .

5.7.1 Input Signals for Internal Set Speed Control

When using the input signal allocated to /SPD-D , /SPD-A , /SPD-B , please set the parameter PN50A.0=1 to allow custom planning of IO functions.

Table 5-70 /SPD-D、/SPD-A、/SPD-B Input Signal

Type	Signal	Connector Pin No.	Meaning
Input	/SPD-D	CN1-41	Changes the servo motor direction.
	/SPD-A	CN1-45	Select the internal set speed.
	/SPD-B	CN1-46	Select the internal set speed.

5.7.2 Selection of Internal Set Speed Control

The internal setting speed control is selected through Pn000.1 .

Table 5-71 Internal Set Speed Control Mode Selection

Parameter		Meaning	When Enabled	Classification
Pn000	n.□□3□	Internal set speed control	After restart	Setup

5.7.3 Internal Set Speed Parameters

Table 5-72 Internal Set Speed Control Mode Selection

Pn301	Internal set speed 1		speed	When Enabled	category
	Setting range	Setting unit	default setting	Immediately	Setup
	0-10000	1 min $^{-1}$	100		
Pn302	Internal set speed 2		speed	When Enabled	category
	Setting range	Setting unit	default setting	Immediately	Setup
	0-10000	1 min $^{-1}$	200		
Pn303	Internal set speed 3		speed	When Enabled	category
	Setting range	Setting unit	default setting	Immediately	Setup
	0-10000	1 min $^{-1}$	300		

5.7.4 Changing Internal Set Speeds with Input Signals

Table 5-73 Internal Set Speed Selection

Input Signal			Motor Direction	Motor Speed
/SPD-D	/SPD-A	/SPD-B		
OFF	OFF	OFF	Forward	Stops the motor with an internal speed of 0.
	OFF	ON		Operates the motor with internal set speed 1, which is set in Pn301.
	ON	ON		Operates the motor with internal set speed 2, which is set in Pn301.
	ON	OFF		Operates the motor with internal set speed 3, which is set in Pn301.
ON	OFF	OFF	Reverse	Stops the motor with an internal speed of 0.
	OFF	ON		Operates the motor with internal set speed 1, which is set in Pn301.
	ON	ON		Operates the motor with internal set speed 2, which is set in Pn301.
	ON	OFF		Operates the motor with internal set speed 3, which is set in Pn301.

5.7.5 Operating Example

An operating example of speed control with the internal set speeds is given below. This example combines speed control with the internal set speeds and the soft start function. The shock that results from speed changes is reduced by using the soft start function.

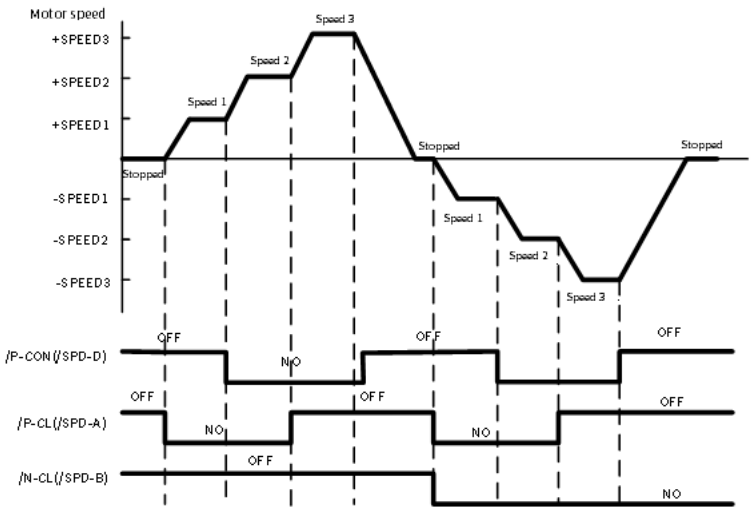

Figure 5-21 Combine Control with Internal Set Speed Control and Soft Start

5.8 Selecting Combined Control Methods

The servo unit can combine two methods from various control methods and change them for use. The control mode is selected through Pn000.1 . The switching method and switching conditions will be described below.

Table 5-74 Combined Control Method Parameter Setting

Parameter		Meaning	When Enabled	Classification
Pn 000 (Function Rotary Basic Switch 0)	n.□□4□	Internal set speed control - speed control	After restart	Setup
	n.□□5□	Internal set speed control - position control		
	n.□□6□	Internal set speed control - torque control		
	n.□□7□	Position Control - Speed Control		
	n.□□8□	Position Control - Torque Control		
	n.□□9□	Torque Control - Speed Control		
	n.□□A□	Speed Control - Speed Control with Zero Clamping		
	n.□□B□	Position control - Position control with command pulse inhibition function		

5.8.1 Switching between Internal Set Speed Control and Another Control Method (Pn000.1 = 4, 5,6)

The conditions for switching between internal set speed control and another control method are given below

When allocating input signals in the default setting state (Pn50A.0 = 0), the control mode and internal setting speed can be switched by /P-CL and /N-CL signals.

Table 5-75 /P-CL, /N-CL Signal Switching

Input Signal			Setting and Action of Pn000.1		
/P-CON (CN1-41)	/P-CL (CN1-45)	/N-CL (CN1-46)	n.□□4□	n.□□5□	n.□□6□
OFF	OFF	OFF	Speed control	Position control	Torque control
	OFF	ON	Forward rotation at speed 1 set by Pn301 .		
	ON	ON	Forward rotation at speed 2 set by Pn302 .		

	ON	OFF	Forward rotation at speed 3 set by Pn303 .		
ON	OFF	OFF	Speed control	Position control	Torque control
	OFF	ON	Reverse rotation at speed 1 set by Pn301 .		
	ON	ON	Reverse rotation at speed 2 set by Pn302 .		
	ON	OFF	Reverse rotation at speed 3 set by Pn303 .		

Even while the motor is operating, speed control, position control, or torque control can be switched to internal set speed control.

Internal speed control + soft start position control is shown below.

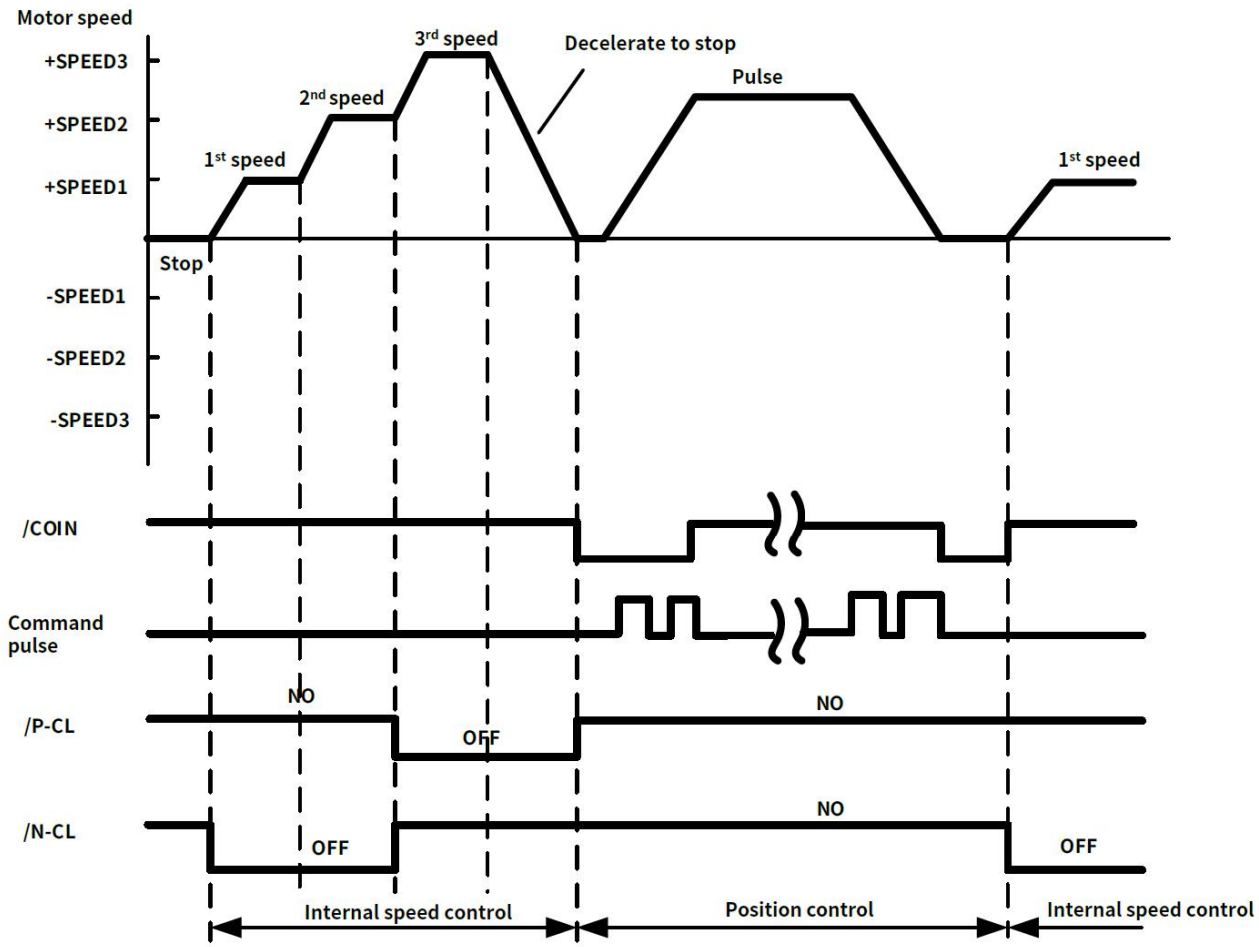

Table 5-22 Internal Speed Control+Soft Start Position Control

Note: 1.The value of t1 is not affected by whether the soft start function is used.. A maximum delay of 2 ms occurs in reading the /SPD-A and /SPD-B signals.

2. Switching of internally set speed control → position control is done after the motor decelerates to a stop within the deceleration time set by Pn306When Changing Input Signal Allocations(Pn50A.0=1)

The control method is switched by turning the /C-SEL signal ON and OFF:

Table 5-76 /C-SEL Signal ON/OFF Switching

Type	Signal	Connector Pin No.	Output Status	Setting and Control Mode of Pn000.1		
				n.□□4□	n.□□5□	n.□□6□
Output	/C-SEL	Must be allocated	ON (closed)	Speed control	Position control	Torque control
			OFF (open)	Internal set speed control	Internal set speed control	Internal set speed control

The internal set speed control (/C-SEL signal OFF) is as follows:

Table 5-77 Internal Set Speed Control (/C-SEL Signal OFF) Operating

input signal			Motor Speed
/SPD-D	/SPD-A	/SPD-B	
OFF	OFF	OFF	Stops the motor with an internal speed of 0.
	OFF	ON	Operates the motor with internal set speed 1, which is set in Pn301
	ON	ON	Operates the motor with internal set speed 2, which is set in Pn302
	ON	OFF	Operates the motor with internal set speed 3, which is set in Pn303
ON	OFF	OFF	Stops the motor with an internal speed of 0.
	OFF	ON	Operates the motor with internal set speed 1, which is set in Pn301
	ON	ON	Operates the motor with internal set speed 2, which is set in Pn302
	ON	OFF	Operates the motor with internal set speed 3, which is set in Pn303

Note: Allocation of /SPD-D, /SPD-A, /SPD-B signals is required . It can be allocated to terminals through Pn50C.0~2 .

5.8.2 Switching between Internal Set Speed Control and Another Control Method (Pn000.1 = 7 , 8 , 9)

Table 5-78 Default Setting of Input Signal Allocation（Pn50A.0 = 0）

Type	Signal	Connector Pin No.	Output Status	Setting and Control Mode of Pn000.1		
				n.□□7□	n.□□8□	n.□□9□
Input	/P-CON	CN1-41	ON (closed)	Speed control	Torque control	Speed control
			OFF (open)	Position control	Position control	Torque control

Table 5-79 When Changing Input Signal Allocation（Pn50A.0 =

type	Signal	Connector Pin No.	output Status	Setting and Control Mode of Pn000.1		
				n.□□7□	n.□□8□	n.□□9□
Input	/C-SEL	Must be allocated	ON (closed)	Speed control	Torque control	Speed control
			OFF (open)	Position control	Position control	Torque control

5.8.3 Switching between Internal Set Speed Control and Another Control Method (Pn000.1 = A , B)

Table 5-80 Default Setting of Input Signal Allocation (Pn50A.0

Type	Signal	Connector Pin No.	Output Status	Setting and Control Mode of Pn000.1	
				n.□□A□	n.□□B□
Input	/P-CON	CN1-41	ON (closed)	Speed control with zero clamping	Position control with command pulse inhibition function
			OFF (open)	Speed control	Position control

Table 5-81 When Changing Input Signal Allocation（Pn50A.0 =

Type	Signal	Connector Pin No.	Output Status	Setting and Control Mode of Pn000.1	
				n.□□7□	n.□□8□
Input	/ZCLAMP	Must be allocated	ON (closed)	Speed control with zero clamping	-
			OFF (open)	Speed control	-
	/INHIBIT		ON (closed)	-	Position control with command pulse inhibition
			OFF (open)	-	Position control

5.9 Selecting Torque Limits

For the purpose of protecting the machine, etc., the output torque can be limited. There are four ways of torque limit as follows.

If the set limit value exceeds the maximum torque, the actual torque will be limited within the maximum torque.

Table 5-82 Torque Limit Method

Limit Method	Outline
Internal Torque Limits	The torque is always limited with the setting of a parameter.
External Torque Limits	The torque is limited with an input signal from the host computer.
Limiting Torque with an Analog Command	An analog reference is used to set the required torque limits.
Limiting Torque with an External Torque Limit and an Analog Reference	The torque is limited by combining torque limits for an external input signal and torque limits for an analog reference.

5.9.1 Internal Torque Limits

The internal torque limit is a limiting method that limits the maximum output torque.

The setting unit is the motor rated torque percentage.

If the value is too low, it will cause insufficient torque during acceleration and deceleration.

Table 5-83 Internal Torque Limit Parameter Setting

Pn402	Forward Rotation Torque Limit Position Speed Torque			When Enabled	Classification
	Setting range	Setting unit	Default setting	Immediately	Setup
	0-800	1%	800		
Pn403	Reverse Torque Limit Position Speed Torque			When Enabled	Classification
	Setting range	Setting unit	default setting	Immediately	Setup
	0-800	1%	800		

The torque waveform is as follows:

Without Internal Torque Limits	With Internal Torque Limits
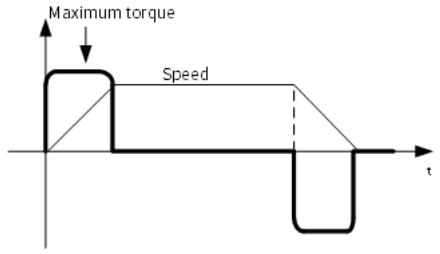	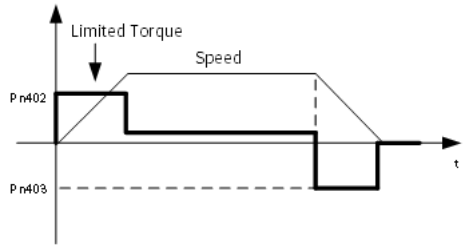

5.9.2 External Torque Limits

External torque limit refers to the method to limit the torque through the input signal of the host controller.

1) External Torque Limit Input Signal

Table 5-84 External Torque Limit Signal

Type	Signal	Connector Pin No.	Output status	Meaning
Input	/P-CL	CN1-45 (default setting)	ON (closed)	Applies the forward external torque limit. The torque is limited to the smaller of the settings of Pn402 and Pn404.
			OFF (open)	Cancels the forward external torque limit. The torque is limited to the setting of Pn402.
Input	/N-CL	CN1-46 (default setting)	ON (closed)	Applies the reverse external torque limit. The torque is limited to the smaller of the settings of Pn403 and Pn405.
			OFF (open)	Cancels the reverse external torque limit. The torque is limited to the setting of Pn403

(2) External Torque Limit Input Signal

Table 5-85 External Torque Limit Input Ralated Parameter

Pn402	Forward rotation torque limit		Position speed torque	When Enabled	Classification
	Setting range	Setting unit	Default setting	Immediately	Setup
	0-800	1%	800		
Pn403	Reverse torque limit		Position speed torque	When Enabled	Classification
	Setting range	Setting unit	Default setting	Immediately	Setup
	0-800	1%	800		
Pn404	Forward External Torque Limit		Position speed torque	When Enabled	Classification
	Setting range	Setting unit	Default setting	Immediately	Setup
	0-800	1%	100		
Pn405	Reverse External Torque Limit		Position speed torque	When Enabled	category
	Setting range	Setting unit	Default setting	Immediately	Setup
	0-800	1%	100		

(3) Changes in the Output Torque for External Torque Limits

Take the direction when Pn000.0 = 0 (CCW is forward rotation) as the motor rotation direction.

Table 5-86 Torque Change with External Limit

		/P-CL	
		OFF	ON
/N-CL	OFF	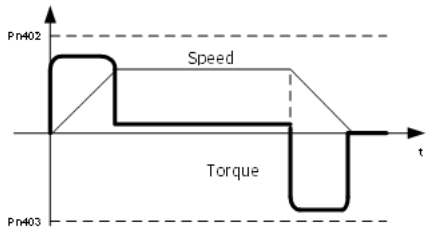	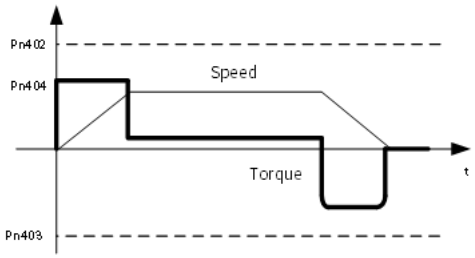
	ON	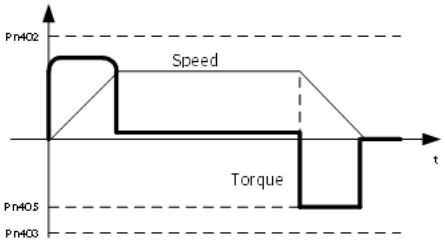	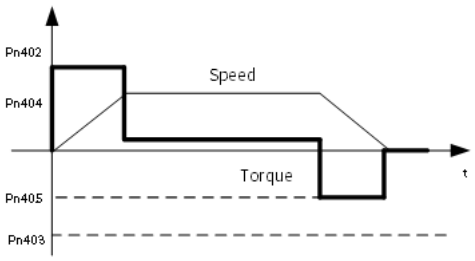

5.9.3 Limiting Torque with an Analog Command

The analog voltage on the T-REF terminals (CN1-9 and CN1-10) is used to limit the torque with an analog command

The smallest of the analog reference torque reference and the torque limits for Pn402 and Pn403 is used.

Table 5-87 Limiting Torque with an Analog Command Parameter Setting

Parameter		Meaning	When Enabled	Classification
Pn002	n.□□□1	Use T-REF as an external torque limit input.	After restart	Setup

Note: 1. Cannot be used in torque control mode.

2. There is no polarity for the input voltage of the analog voltage reference for the force limit. The absolute value of a positive or negative voltage is input, and a force limit that corresponds to the absolute value of the input voltage is applied in the forward and reverse directions.

1) Input Signal for Torque Limits with an Analog Voltage Command

The input signal that is used for torque limits with an analog voltage reference is described below.

Table 5-88 Input Signal for Torque Limits with an Analog Voltage Command

Type	Signal	Connector Pin No.	Meaning
Input	T-REF	CN1-9	Torque command input signal
	SG	CN1-10	Signal ground for torque command input.

2) Settings Related to Limiting Torque with an Analog Voltage Command

The parameters that are related to limiting torque with an analog voltage reference are as below.

Table 5-89 Torque Limits with an Analog Voltage Command Parameter Setting

Pn400	Speed Command Input Gain	Position speed torque		When Enabled	Classification
	Setting range	Setting unit	default setting	Immediately	Setup
	0-800	1%	800		
Pn402	Forward Rotation Torque Limit	Position speed torque		When Enabled	Classification
	Setting range	Setting unit	default setting	Immediately	Setup
	0-800	1%	800		
Pn403	Reverse Torque Limit	Position speed torque		When Enabled	Classification
	Setting range	Setting unit	default setting	Immediately	Setup
	0-800	1%	800		
Pn415	T-REF Filter Time Constant	Position speed torque		When Enabled	Classification
	Setting range	Setting unit	default setting	Immediately	Setup
	0-65535	0.01ms	0		

5.9.4 Limiting Torque with an External Torque Limit and an Analog Voltage Command

The torque is limited by combining torque limits for an external input signal and torque limits for an analog voltage command.

When the /P-CL or /N-CL signal is ON, the torque will be limited by the smaller of the torque limit for the analog voltage reference or the setting of Pn404 or Pn405.

Table 5-90 External Torque Limits Input

Parameter		Meaning	When Enabled	Classification
Pn 002	n.□□□ 3	Use T-REF as an external torque limit input when /P-CL or /N-CL is active.	After restart	Setup

Note: It cannot be used in torque control mode.

1) Input signal

The input signals that are used for torque limits with an external torque limit and an analog voltage command are described below

Table 5-91 External Torque Limits Input Signal

Type	Signal	Connector Pin No.	Meaning
Input	T-REF	CN1-9	Torque command input signal.
	SG	CN1-10	Signal ground for torque command input

Table 5-92 External Torque Limits Input Signal

Type	name	Connector Pin No.	Output status	Meaning
Input	/P-CL	CN1-45 (default setting)	ON (closed)	Applies the forward external torque limit. The torque is limited to the smallest of the analog reference or the setting of Pn402 or Pn404.
			OFF (open)	Cancels the forward external torque limit. The torque is limited to the setting of Pn402.
Input	/N-CL	CN1-46 (default setting)	ON (closed)	Applies the reverse external torque limit. The torque is limited to the smallest of the analog reference or the setting of Pn403 or Pn405.
			OFF (open)	Cancels the reverse external torque limit. The torque is limited to the setting of Pn403

2) Related Parameters

Table 5-93 Parameters Related to Torque Limits with an External Torque Limit and an Analog Voltage

Pn400	Torque Command Input Gain		Position speed torque	When Enabled	Classification
	Setting range	Setting unit	Default setting	Immediately	Setup
	10-100	0.1V	30 (3.0V)		
Pn402	Forward Torque Limit		Position speed torque	When Enabled	Classification
	Setting range	Setting unit	Default setting	Immediately	Setup
	0-800	1%	800		
Pn403	Reverse Torque Limit		Position speed torque	When Enabled	Classification
	Setting range	Setting unit	Default setting	Immediately	Setup
	0-800	1%	800		
Pn404	Forward External Torque Limit		Position speed torque	When Enabled	Classification
	Setting range	Setting unit	Default setting	Immediately	Setup
	0-800	1%	100		
Pn405	Reverse External Torque Limit		Position speed torque	When Enabled	Classification
	Setting range	Setting unit	Default setting	Immediately	Setup
	0-800	1%	100		
Pn415	T-REF Filter Time Constant		Position speed torque	When Enabled	Classification
	Setting range	Setting unit	Default setting	Immediately	Setup
	0-65535	0.01ms	0		

5.9.5 Torque Limit Detection Signal

This signal is output when the motor is in the state of torque limit.

Table 5-94 Signal Output in the status of limiting the motor output

Type	Signal	Connector Pin No.	Output Status	Meaning
Output	/CLT	Must be allocated	ON (closed)	The motor output torque is being limited.
			OFF (open)	The motor output torque is not being limited.

5.10 Security Function

In order to protect workers from the dangerous movement of the moving parts of the machine, lower the risk when using the machine, this servo unit has built-in safety functions. Especially when working in hazardous areas inside guards, such as for machine maintenance, the safety function can be used to avoid hazardous moving machine parts

5.10.1 Hard wire Base Block (HWBB) Function

The hard wire base block function (hereinafter referred to as HWBB function) refers to the safety function of shutting off the motor current through hard wire circuit.

The drive signals to the Power Module that controls the motor current are controlled by the circuits that are independently connected to the two input signal channels to turn OFF the power module and shut OFF the motor current. Please refer to the figure in the following.

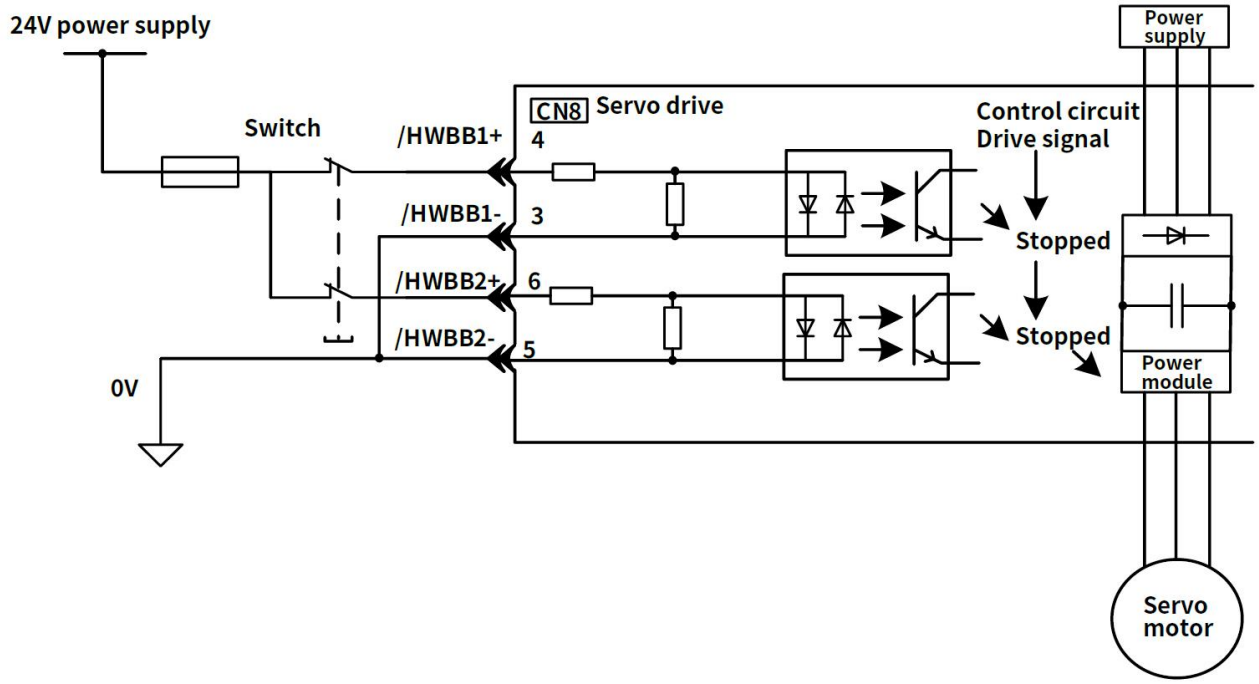

Figure 5-23 Hard Wire Base Block Function

Note: For safety function signal connections, the input signal is the 0-V common and the output signal is a source output.This is opposite to other signals described in this manual.To avoid confusion, the ON and OFF status of signals for the safety function are defined as follows:

ON: The state in which the relay contacts are closed or the transistor is ON and current flows into the signal line.

OFF: The state in which the relay contacts are open or the transistor is OFF and no current flows into the signal line.

1) Risk Assessment

Using the HWBB function, be sure to perform a risk assessment of the equipment to confirm that the safety level of the standards is satisfied

Even if the HWBB function is effective, the following risks still exist, please be sure to consider the safety of the following factors in the risk assessment.

・The servo motor will move if an external force is applied to it (for example, gravity on a vertical axis). Implement measures to hold the servo motor, such as installing a separate mechanical brake..

・If a failure occurs such as a power module failure, the servo motor may move within an electric angle of 180. Check if there’s a risk of danger.

The rotational angle or travel distance depends on the type of servo motor as follows.

Rotary servo motor: 1/6 rotation max (rotational angle calculated at the motor shaft).

Direct drive motor: 1/20 rotation max (rotational angle calculated at the motor shaft).

・The HWBB does not shut OFF the power to the servo unit or electrically isolate it. Implement measures to shut OFF the power supply to the servo unit before you perform maintenance on it.

2)Hard Wire Base Block State (HWBB state)

The status of the servo unit when the hard wire base block function is running is as follows. When the /HWBB1 or /HWBB2 signal is OFF , the HWBB function of the servo unit will operate and the servo unit will enter the hard wire base block state (hereinafter referred to as the HWBB state).

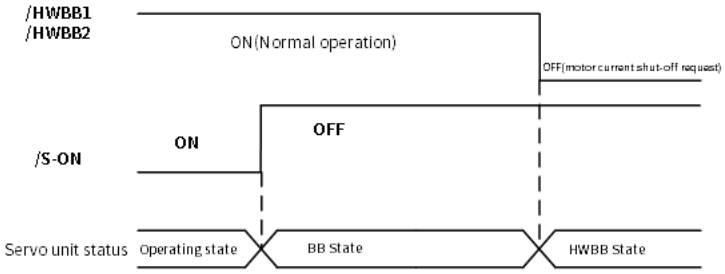

Figure 5-24 Hard Wire Base Block State Timing Chart

3) Resetting the HWBB state

Normally, after the /S-ON signal is turned OFF and power is no longer supplied to the servo motor, the /HWBB1 and /HWBB2 signals will turn OFF and the servo unit will enter the HWBB state. If you turn ON the /HWBB1 and /HWBB2 signals in this state, the servo unit will enter a base block (BB) state and will be ready to acknowledge the /S-ON signal.

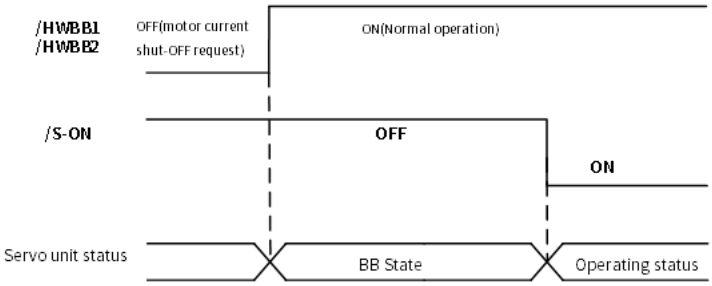

Figure 5-25 Resetting from HWBB State Timing Chart

If the /HWBB1 and /HWBB2 signals are OFF and the /S-ON signal is input, the HWBB state will be maintained even after the /HWBB1 and /HWBB2 signals are turned ON.

Turn OFF the /S-ON signal to place the servo unit in the BB state and then turn ON the /S-ON signal again.

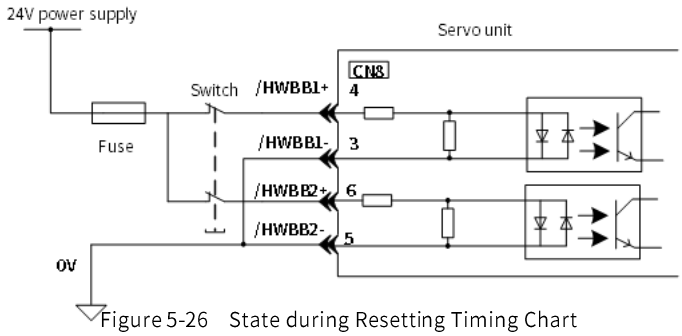

Figure 5-26 State during Resetting Timing Chart

Note: 1. If the servo unit is placed in the BB state while the main circuit power supply is OFF, the HWBB state will be maintained until the /S-ON (Servo ON) signal is turned OFF.

2. If the /S-ON (Servo ON) signal is set to be always active(Pn50A.1), you cannot reset the HWBB state. Do not set this value if you are using the HWBB.

4) Detecting Errors in HWBB signal

If only the /HWBB1 or /HWBB2 signal is input, a safety function signal input timing error (A.Eb1) alarm will occur. This makes it possible to detect failures, such as disconnection of an HWBB signal.

Note: The A.Eb1 alarm (Safety Function Signal Input Timing Error) is not a safety-related element. Keep this in mind when you design the system.

5) Connection Example and Specifications of Input Signal (HWBB signal)

The input signal must be connected to the two input signal channels. The connection example and specifications of the input signal (HWBB signal) are as follows:

Note: For safety function signal connections, the input signal is the 0-V common and the output signal is a source output.This is opposite to other signals described in this manual.To avoid confusion, the ON and OFF status of signals for the safety function are defined as follows:

- ON: The state in which the relay contacts are closed or the transistor is ON and current flows into the signal line.
- OFF: The state in which the relay contacts are open or the transistor is OFF and no current flows into the signal line.

Input signal (HWBB signal) connection example:

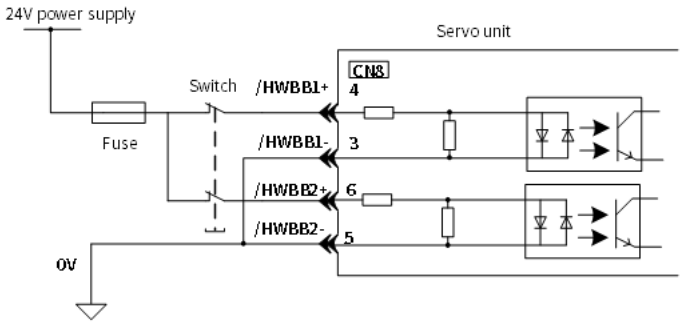

Figure 5-27 HWBB Input Signal Connection Example

Table 5-95 Input Signal (HWBB Signal) Specifications

Type	Signal	Connector Pin No.	Status	Meaning
Input	/HWBB1	CN3-4 CN3-3	ON (closed)	HWBB function is not active (normal)
			OFF (open)	HWBB function is active (requires to shut OFF the motor current)

Table 5-96 Input Signal (HWBB Signal) Electrical

	/HWBB2	CN3-6 CN3-5	ON (closed)	HWBB function is not active (normal)
			OFF (open)	HWBB function is active (requires to shut OFF the motor current)

Item	Characteristic	Remarks
Internal Resistance	3.3kΩ	-
Working Voltage Range	+11V ~ +25V	-
Maximum Delay Time	20 ms	The interval between /HWBB1 and /HWBB2 OFF and HWBB function starts

If an HWBB is requested by turning OFF the two HWBB input signal channels (/HWBB1 and /HWBB2), the power supply to the servo motor will be turned OFF within 20 ms

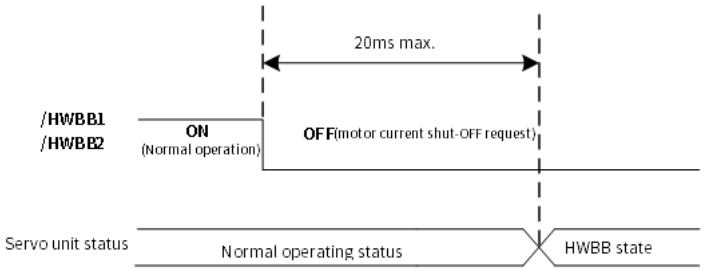

Figure 5-28 Base Block Function Operation Timing Chart

Note: 1. The OFF status is not recognized if the OFF interval of the /HWBB1 or /HWBB2 signal is 0.5 ms or shorter

2. You can check the status of the input signals by using monitor displays. For details, refer to "Safety Input Signal Monitoring" .

6) When running through the Utility function

The HWBB function is also available when running through Utility functions .

However, under the following Utility functions, the /HWBB1 and /HWBB2 signals are OFF . Even if the /HWBB1 and /HWBB2 signals are turned ON during the operation of the Utility functions , the operation will not work. Please exit utility function and enter again to restart

- Jogging(Fn002)
- Origin search (Fn003)
- Program jogging (Fn004)
- Advanced auto tuning (Fn201)
- EasyFFT (Fn206)
- Adjustment of motor current detection signal offset (Fn00E)

7) Servo Ready Output (/S-RDY) Signal

The /S-ON (Servo ON) signal will not be acknowledged in the HWBB state, so the servo ready output will turn OFF .

The Servo Ready Output Signal will turn ON if both the /HWBB1 and /HWBB2 signals are ON and the /S-ON signal is turned OFF.

An example is provided below for when the main circuit power supply is ON and the SEN signal turns ON when there is no servo alarm. (An absolute encoder is used in this example.)

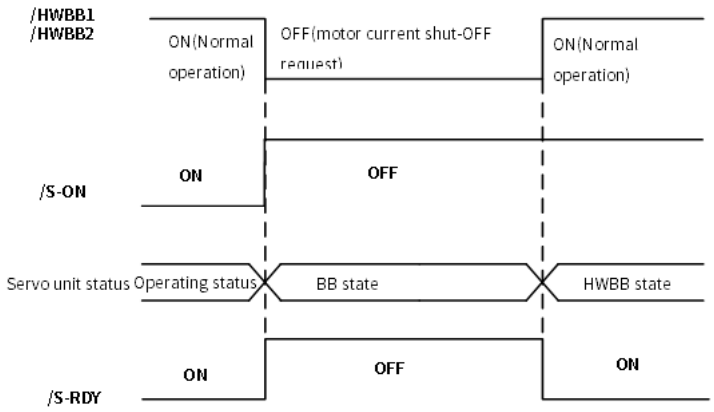

Figure 5-29 Servo Ready Output（/S-RDY） Timing Chart

8) Brake Signal (/BK)

If the HWBB operates when the /HWBB1 or /HWBB2 signal is OFF, the /BK (Brake) signal will turn OFF . At that time, the setting in Pn506 (Brake Reference - Servo OFF Delay Time) will be disabled. Therefore, the servo motor may be moved by external force until the actual brake becomes effective after the /BK signal turns OFF.

Note: Since the brake signal output is not a safety function, please ensure that no danger will occur even if the brake signal fails in the HWBB state when designing the system.In addition, please note that the brake of the servo motor is for fixing but not stopping the motor

9) Dynamic Brake

When activate dynamic brake through Selection of Stopping Method at Servo OFF (Pn001.0), the dynamic brake will stop the servo motor after the /HWBB1 or /HWBB2 signal is OFF and the HWBB function is operating.

Note: 1. The dynamic brake is not a safety-related element. You must design the system so that a hazardous condition does not occur even if the servo motor coasts to a stop in the HWBB state. Normally, we recommend that you use a sequence that returns to the HWBB state after stopping for a reference.

2. If the application frequently uses the HWBB, stopping with the dynamic brake may result in the deterioration of elements in the servo unit. To prevent internal elements from deteriorating, use a sequence in which the HWBB state is returned to after the servo motor has come to a stop.

10) Setting of Position Deviation Clearing

A position deviation in the HWBB state is cleared according to the setting of Pn200.2(Clear Operation)

If you specify not clearing the position deviation during position control (Pn200.2=1), the position deviation will accumulate unless the position command from the host controller is canceled in the HWBB state. The following conditions may result.

- An A.d00 alarm (Position Deviation Overflow) may occur
- If you turn ON the servo after changing from HWBB state to BB state, the servo motor may move for the accumulated position deviation.

Therefore, stop the position reference from the host controller while in the HWBB state. If you specify not clearing the position deviation during position control(Pn.200.2=1), input the CLR signal during the HWBB or BB state to clear the position deviation.

11) Servo Alarm Output Signal (ALM)

The servo alarm output signal (ALM) cannot be output in the HWBB state .

5.10.2 External Device Monitoring (EDM1)

External device monitor (EDM1) is a function to monitor the failure in HWBB. Please connect as a feedback signal such as to the safety unit.

Failure Detection Signal for EDM1 Signal:

EDM1 and /HWBB1 and /HWBB2 signals is shown below.

The relationship between the EDM1, /HWBB1, and /HWBB2 signals is shown below.Detection of failures in the EDM1 signal circuit can be achieved by using the status of the /HWBB1, /HWBB2, and EDM1 signals in the following table. A failure can be detected by checking the failure status, e.g., when the power supply is turned ON.

Table 5-97 4 Status of EDM1

Signal	Logic			
/HWBB1	ON	ON	OFF	OFF
/HWBB2	ON	OFF	ON	OFF
EDM1	OFF	OFF	OFF	ON

Note: The EDM1 signal is not a safety output. Use it only for monitoring for failures..

1) Connection Example and Specifications of Output Signal (EDM1 signal)

The connection example output signal (EDM1 signal) are shown below.

Note: For safety function signal connections, the input signal is the 0-V common and the output signal is a source output.This is opposite to other signals described in this manual.To avoid confusion, the ON and OFF status of signals for the safety function are defined as follows:

- ON: The state in which the relay contacts are closed or the transistor is ON and current flows into the signal line.
- OFF: The state in which the relay contacts are open or the transistor is OFF and no current flows into the signal line.

2) Connection example of output signal (EDM1 signal):

The output signal (EDM1 signal) is a common emitter output, and the connection example is as follows:

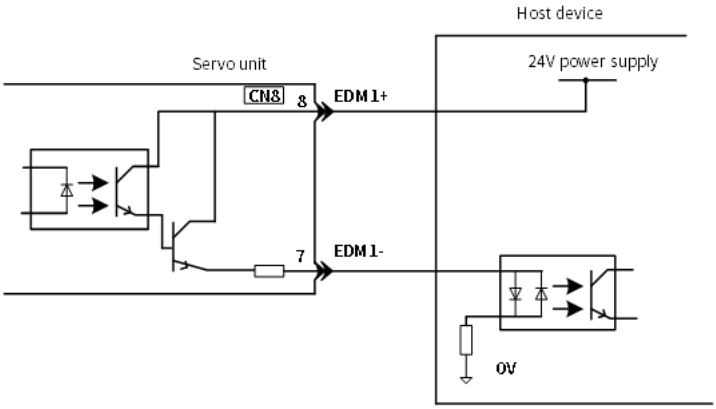

Figure 5-30 Common Emitter Output Signal(EDM1 Signal)

Table 5-98 Output Signal(EDM1 Signal) Specifications

Type	Signal	Connector Pin No.	Status	Meaning
Output	EDM1	CN3-8 CN3-7	ON (closed)	/HWBB1 signal and /HWBB2 signal operate normally.
			OFF (open)	/HWBB1 signal or /HWBB2 signal is not activated,or neither the /HWBB1 signal nor the /HWBB2 signal operates.

Table 5-99 Output Signal(EDM1 Signal) Electric

Item	Characteristic	Remarks
Maximum Allowable Voltage	DC30V	—
Maximum Current	DC50mA	—
The Maximum Voltage Drop when the Signal is ON	1.0V	It is the voltage between EDM1+ ~ EDM1- when the current is 20mA,
Maximum Delay Time	20ms	The time of changing from /HWBB1, /HWBB2 to EDM1

5.10.3 Application Examples for Safety Functions

The following provides the examples of using safety functions

1)Output Signal (EDM1 Signal) Connection Example and Specifications

In the following example, a safety Unit is used and the HWBB operates when the guard is opened.

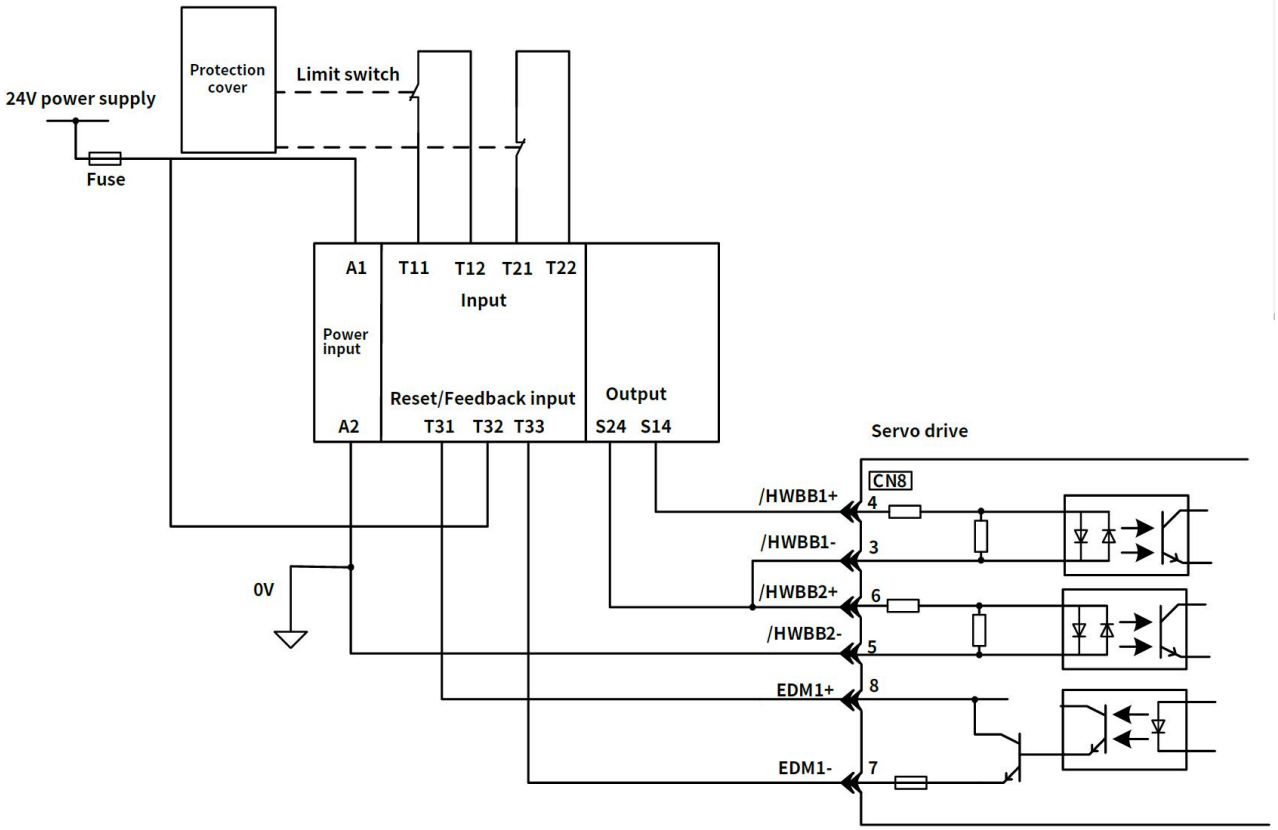

Figure 5-31 Connection Example of HWBB Operating when Safety Unit is used and the Guard is Opened

Under normal circumstances, When the guard is opened, both the /HWBB1 and the /HWBB2 signals turn OFF, and the EDM1 signal turns ON. Because the feedback circuit is ON while the guard is closed, the Safety Unit is reset, the /HWBB1 and the / HWBB2 signals turn ON, and the operation is enabled.

Note: EDM1 signal is used for common emitter output. When wiring, make sure that current flows from EDM1+ to EDM1- .

2) Failure Detection Method

If a failure occurs (e.g., the /HWBB1 or the /HWBB2 signal remains ON), the safety unit is not reset when the guard is closed because the EDM1 signal remains OFF. Therefore starting is not possible and a failure is detected.

In this case the following must be considered: an error in the external device, disconnection of the external wiring, short-circuiting in the external wiring, or a failure in the servo unit. Find the cause and correct the problem.

3) Steps to use

① Request is received to open the guard

② When the motor is running, the stop command is received from the host controller, the servo motor will stop and be OFF .

③ The guard is opened

④ The /HWBB1 and / HWBB2 turn OFF , the HWBB function operates (Working inside the guard is enabled).

⑤ Leave the guard after completing the work.

⑥ The guard is closed.

⑦ Servo turns ON by the host controller .

5.10.4 Validating Safety Functions

When you commission the system or perform maintenance or servo unit replacement, you must always perform the following validation test on the HWBB function after completing the wiring

・When the /HWBB1 and /HWBB2 signals turn OFF, confirm that the panel operator or digital operator displays Hbb and that the servo motor does not operate.

・Monitor the ON/OFF status of the /HWBB1 and /HWBB2 signals via Un015 .

・If the ON/OFF status of the signals do not coincide with the display, the following must be considered: an error in the external device, disconnection of the external wiring, short-circuiting in the external wiring, or a failure in the servo unit. Find the cause and correct the problem.

・Confirm that the EDM1 signal is OFF while in normal operation by using the feedback circuit input display of the connected device.

5.10.5 Safety Precautions When Using the Security Function

・To confirm that the HWBB function satisfies the safety requirements of the system, you must conduct a risk assessment of the system. Incorrect use of safety function may cause injury

・The servo motor will move if there is an external force (e.g., gravity on a vertical axis) even when the HWBB function is operating. Use a separate means, such as a mechanical brake, that satisfies the safety requirements.Incorrect use of the safety function may cause injury

・While the HWBB function is operating, the servo motor may move within an electric angle of 180° or less as a result of a servo drive failure. Use the HWBB function for an application only after confirming that movement of the servo motor will not result in a hazardous condition.Incorrect use of the safety function may cause injury

・Dynamic brake・The dynamic brake and the brake signal are not safety-related elements. You must design the system so that servo drive failures will not cause a hazardous condition while the HWBB function is operating.Incorrect use of the safety function may cause injury

・Connect devices that satisfy the safety standards for the signals for safety functions.Incorrect use of the safety function may cause injury.

・When using the HWBB function as an emergency stop function, please use an electrical mechanical part separately to cut off the power to the motor. Incorrect use of the safety function may cause injury.

・The HWBB function does not shut OFF the power to the servo drive or electrically isolate it. Implement measures to shut OFF the power supply to the servo drive before you perform maintenance on it.There is a risk of electric shock.

5.11 Absolute Encoder

With a system that uses an absolute encoder, the host controller can monitor the current position.

Therefore, it is not necessary to perform an origin return operation when the power supply to the system is turned ON.

To save the position data of the absolute encoder, a battery unit is required. Install the battery on the encoder cable with the battery unit. When not using an encoder cable with a battery unit, install a battery in the host controller

Prohibition: Do not install batteries on both sides of the host controller and the battery unit (if installed on both sides at the same time, a short circuit will be formed between the batteries, which is very dangerous) .

When using an absolute encoder, set Pn002.2=0 (Default setting) .

Table 5-100 Absolute Encoder Parameter Setting

Parameter		meaning	When Enabled	Classification
Pn002	n. □0□□ (Default setting)	Use the absolute encoder normally.	After Restart	Setup

	n. □1□□	Use an absolute encoder as an incremental encoder .		

5.11.1 Absolute Data Request (SENS_ON command)

When outputting absolute value data from the servo unit, it is necessary to input the sensor ON (SENS_ON) command. The sensor ON (SENS_ON) command operates at the following timing.

Table 5-101 Absolute Data Input

Type	Signal	Connector Pin No.	Signal Status	Meaning
Input	SEN	CN1-41	OFF (L level)	Does not request the absolute date from the servo unit
			ON (H level)	Requests the absolute data from the servo unit

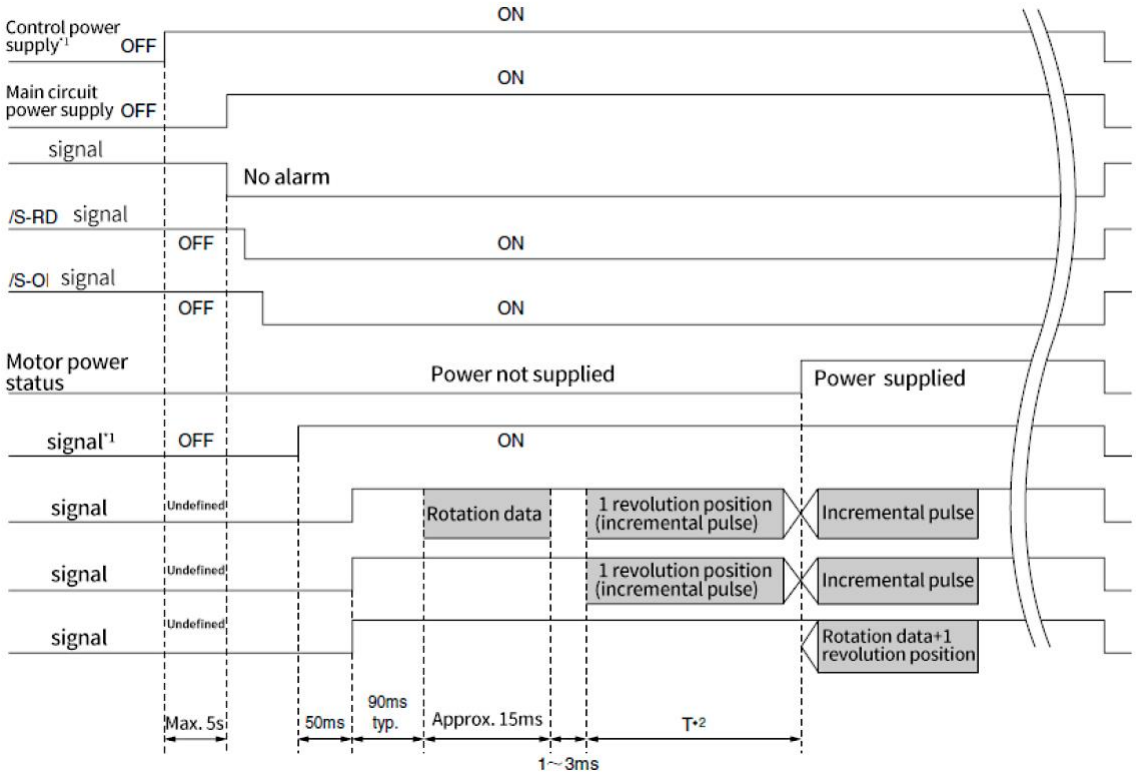

Figure 5-32 Absolute Data Output from Servo Unit Timing Chart

Note : When the control power supplyis OFF , please input the sensor OFF(SENS_OFF) command .

5.11.2 Battery Replacement

If the battery voltage drops to approximately 2.7 V or less, an A.830 alarm (Encoder Battery Alarm) or an A.930 warning (Absolute Encoder Battery Error) will be displayed.. When the above alarm or warning appears, please follow the steps below to replace the battery.

Whether to display an A.830 alarm or a A.930 warning is determined by the setting of Pn008

Table 5-102 Alarm Display Parameter Setting

Parameter		Meaning	When Enabled	Classification
Pn008	n.□□□0 (default setting)	Output alarm (A.830) for low battery voltage.	After restart	Setup
	n.□□□1	Output warning (A.930) for low battery voltage.		

・When Pn008.0=0 is set

The ALM signal is output for up to five seconds when the control power supply is turned ON, and then the battery voltage is monitored for four seconds.No alarm will be displayed even if the battery voltage drops below the specified value after these four seconds.

・When Pn008.0=1 is set

The ALM signal is output for up to five seconds when the control power supply is turned ON, and then the battery

voltage is monitored continuously.

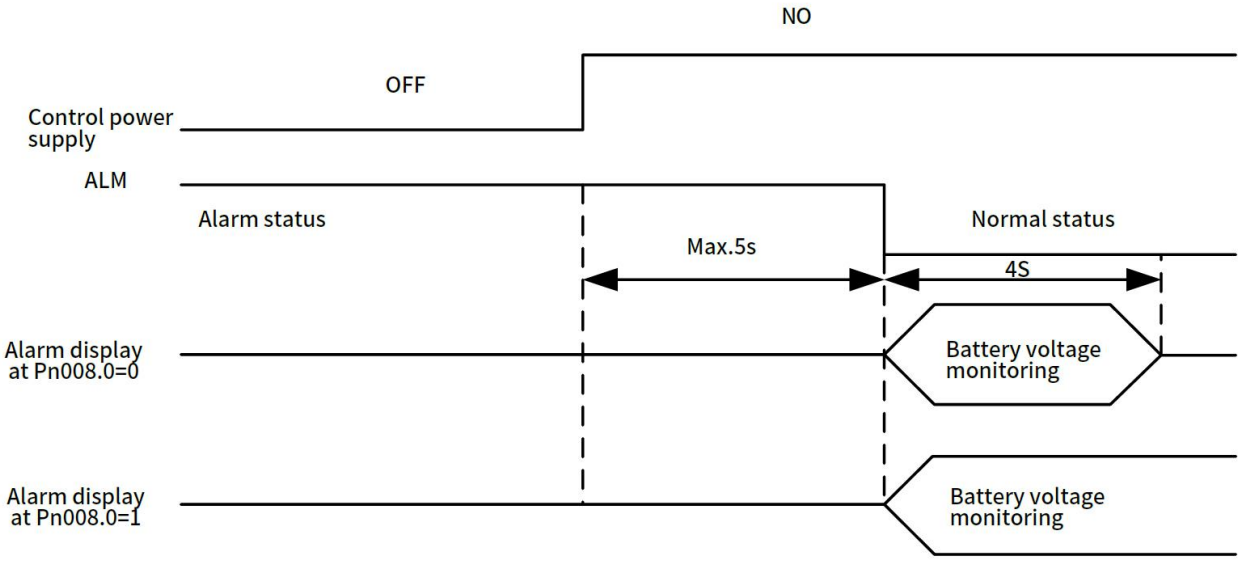

Figure 5-33 Alarm Display Timing Chart

Battery replacement procedure when using an encoder cable with a battery unit

(1) Only turn on the control power supply of the servo unit.

(2) Open the cover of the battery unit.

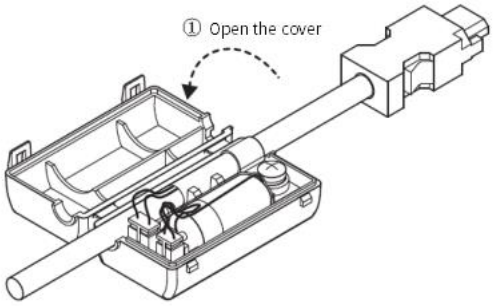

(3) Remove the old battery and mount a new battery.

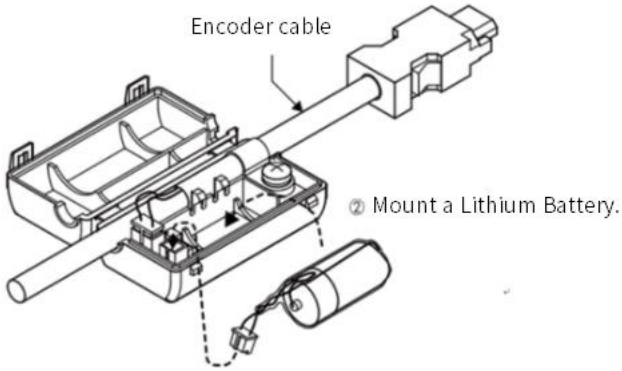

(4) Close the cover of battery unit.

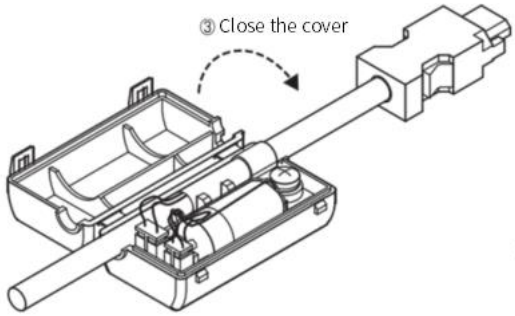

(5) Turn OFF the power supply to the servo drive to clear the A.830 alarm(Encoder Battery Alarm)

(6) Turn on the power supply to servo unit again

(7) Make sure that the alarm has been cleared and that the servo unit operates normally.

Note: If you remove the Battery or disconnect the encoder cable while the control power supply to the servo unit is OFF, the absolute encoder data will be lost.

5.11.3 Sequence for Reading and Outputting Position Data from Absolute Encoder

The sequence from reading and outputting position data from absolute encoder to the host controller from the servo unit is described below.

1) Overview of Absolute Data

As shown in the figure below, the serial data and pulses from the absolute encoder output by the servo unit are output from "PAO, PBO, PCO".

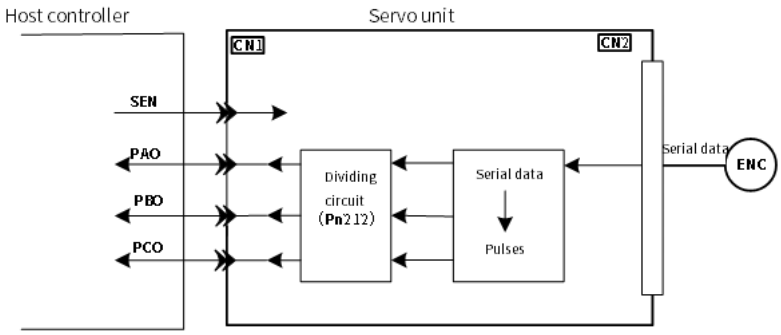

Figure 5-34 Absolute Data Output from Servo Unit Conceptual Diagram

Table 5-103 Signal Output

Signal	Status	Signal Contents
PAO	First signal	Rotary serial data Initial incremental pulses
	During normal	Incremental pulses

	operation	
PBO	First signal	Rotary serial data Initial incremental pulses
	During normal operation	Incremental pulses
PCO	Always	Origin pulse

C-Phase output specifications :

The pulse amplitude of phase C (origin pulse) changes with encoder divided pulses (Pn212), which is the same as the amplitude of phase A. The output time is one of the following modes.

- Synchronize with APhase Rising Edge
- Synchronize with APhase Falling Edge
- Synchronize with BPhase Rising Edge
- Synchronize with B Phase Falling EdgeNote : When the host controller is used to process the outputting and reading of the absolute encoder data, do not reset the count through the PCO signal output .

2) Sequence of Reading and Outputting Position Data form Absolute Encoder

① Output sensor ON(SENS_ON) command from the host controller

② After 100ms, it enters the status for receiving the rotary serial data, and the reversible counter used for incremental pulse counting is cleared.

③ Receive8-character rotary serial data.

④ After reading the last rotary serial data for about 400ms, it enters the normal incremental action status.

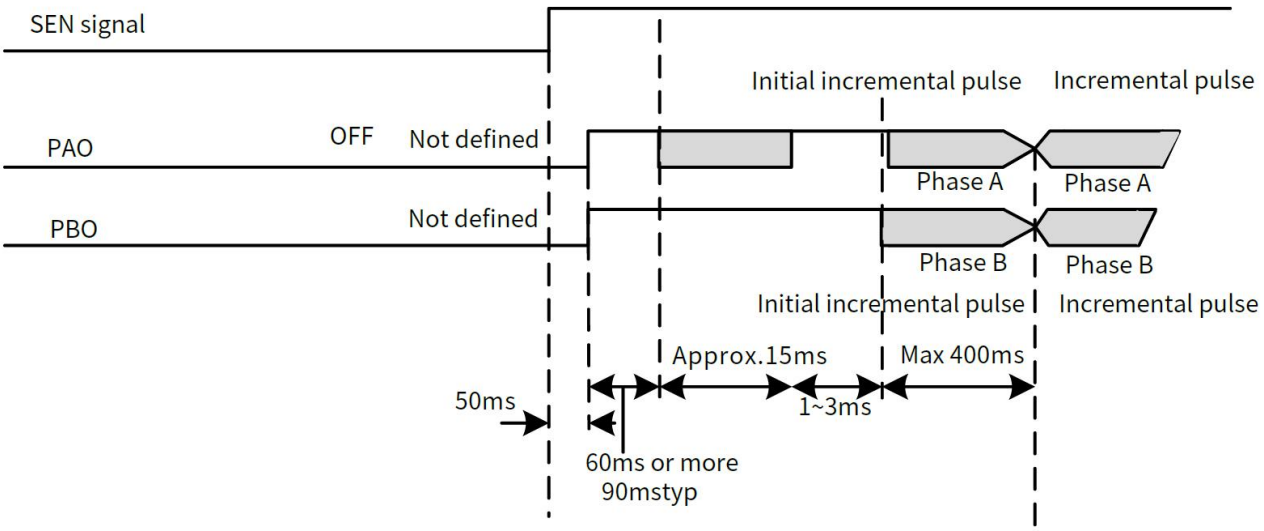

Figure 5-35 Sequence of Reading and Outputting of the Position Data from Absolute Encoder Timing Chart

＜Notes＞

Regardless of Pn000.0 setting value, when the divided pulse receives the forward rotation command, B-phase lead.

Multiturn data: Indicates the position at which the motor shaft has rotated several times from the reference position (the value of basic setting (initialization)) .

Initial incremental pulse: Same as the usual incremental pulse, it sends an absolute initial incremental pulse. That is the pulse from the origin position of the motor shaft to the current motor shaft position, which is output after divided by the divider inside the servo unit output

The pulse output speed varies according to the setting value of the encoder divided pulse(Pn212). It can be calculated by the following formula.

Table 5-104 Initial Incremental Pulse Output Speed Calculation Formula

Setting Range of Number of Encoder Output Pulses	Initial Incremental Pulse Output Speed Calculation Formula

16-16383	$\frac{680 \times Pn212}{16383}$

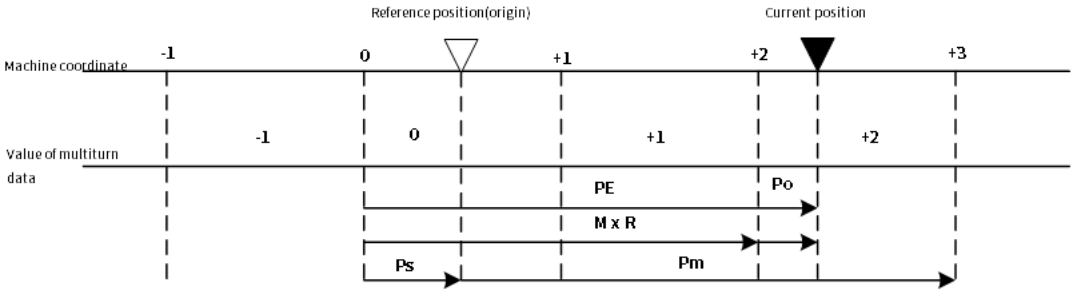

Figure 5-36 Position Data from Absolute Encoder PM Output Method

The current position PM in the machine coordinate system is calculated as follows:

$P_E = M \times R + P_O$

$P_S = M_S \times R + P_S'$

$P_M = P_E - P_s$

Table 5-105 Formula Symbol Defination

Symbol	Meaning
P_E	Position data for the current position of the absolute encoder
M	Current position of the multiturn data of the absolute encoder
P_O	Initial incremental pulse
P_S'	The initial incremental pulse number read at the basic setting .
P_M	The current value required in the user's system .
R	Number of encoder pulses per revolution (Setting of Pn212).
P_E	Current value read from encoder .

➢ Note : In reverse mode (Pn000.0=1), the formula is as follows :

$P_E = -M \times R + P_O$

$P_S = M_S \times R + P_S'$

$P_M = P_E - P_S$

3) Rotational serial data specification and initial incremental pulse rotary serial data specification

Rotation serial data output from PAO .

Table 5-106 Multiturn Data Specification and Initial Incremental Pulse Multiturn Data Specifications

Item	Start-stop Synchronization (ASYNC)
Transmission Speed	9600bps
Start Bits	1 bit
Stop Bits	1 bit
Parity	even
Character Code	ASCII, 7 bits

Data Format (8 characters)	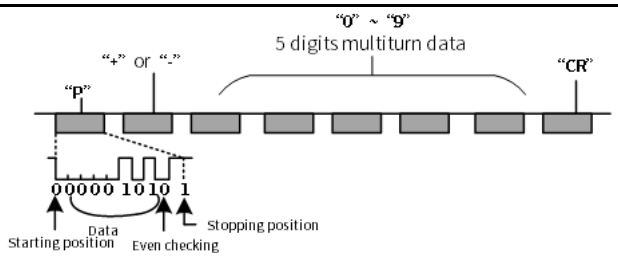 1. The zero rotation range is any one of "P+00000 " (CR) or "P-00000" (CR). 2. The range of multiturn is "±32768 " . If it exceeds this range, the data will become "-32768 " when "+32768 " is set, and will become "+32768 " when "-32768 " is set. When changing the upper limit of the number of rotations, it will be changed within the setting range in "Setting the upper limit of the number of rotations".

The initial incremental pulse is the same as the usual incremental pulse, and the initial incremental pulse is output after divided by the divider inside the servo unit.

4) Alarm content transmission

When the absolute encoder is used, the alarm content detected by the servo unit can be transmitted to the host device through PA0 output in the form of serial data when the SEN signal changes from H level to L level .

Note : The SEN signal is not received during servo ON, and the output example of the alarm content is as follows .

Table 5-107 Alarm Transmission

SEN Signal	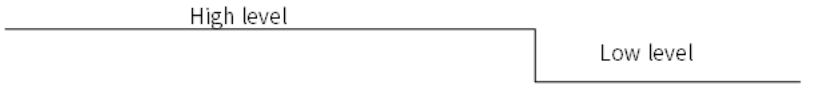
PAO Output	

5.11.4 Resetting the Absolute Encoder (when an Alarm occurs)

⚠ Danger

The multiturn data will be reset to a value between -2 and +2 rotations when the absolute encoder is reset. The reference position of the machine system will change. Adjust the reference position in the host controller to the position that results from resetting the absolute encoder.

If the machine is started without adjusting the position in the host controller, unexpected operation may cause personal injury or damage to the machine.

In the following cases, reset the abosulte encoder.

- When starting the system for the first time.
- When Encoder Backup Alarm (A.810) occurs .
- When Encoder Checksum alarm (A.820) occurs .
- When you want to reset the multiturn data in the absolute encoder.

Perform basic reset through Fn008 .

Initial setting steps:

(1) Press on the panel Ⓜ key to select the Utility function Fn000, and the panel displays "FN000" .

(2) Press the Ⓐ or Ⓥ key , the panel displays "FN008".

(3) Press the key Ⓢ for about 1 second, the panel displays "PGCL1".

(4) Press the key Ⓐ until the bread shows "PGCL5". (If you press wrong key operation in the process, the panel will display "no_oP" flashing for about 1 second, and then returns to the Utility function mode.Then please restart the

Ⓜ

operation from the beginning)

(5) Press key to start resetting the absolute encoder. After the resetting is completed, the panel will display "donE" flashing for about 1 second .

(6) Return and the panel displays "PGCLS".

(7) To make the setting active, please turn on the power again.

5.12 Position Comparison Output Function

5.12.1 Function Description

The position comparison function is to use the instantaneous position data to compare with the value stored in the data group in advance. When the comparison condition is satisfied, it will immediately output a DO signal with an adjustable pulse width for subsequent motion control.

Position comparison function: It can be selected to enable DO terminal output at high/low level. When enabled at high level, it is enabled when the corresponding DO terminal is connected to the common terminal, and it is disabled when it is disconnected from the common terminal; when enabled at low level, it is disabled when the corresponding DO terminal is connected to the common terminal, and enabled when it is disconnected. There are a total of 4 DO outputs on the Y7 S.

Table 5-108 Function Description Table

Operating Conditions of the Position Comparison Output Function	
Control mode	All control modes
Other	The elements besides the control parameters are properly set, and the motor is operating normally

5.12.2 Related Parameters

Table 5-109 Description of Related Parameters

Parameter	Name	Unit	Description
Pn610	Position comparison output function	—	0: OFF (default setting); 1: positive comparison; 2: negative comparison; 3: Two-way comparison;
Pn611	first set position	—	-1073741824—107374182 3
Pn613	second set position	—	-1073741824—107374182 3
Pn615	third set position	—	-1073741824—107374182 3
Pn617	4th set position	—	-1073741824—107374182 3
Pn619	Effective time of first position output signal	0.125ms	0—65535
Pn61A	Effective time of first position output signal	0.125ms	0—65535
Pn61B	Effective time of first position output signal	0.125ms	0—65535
Pn61C	Effective time of first position output signal	0.125ms	0—65535
Pn513	Bit0: First position output comparison	—	0: Disabled (The signal is not output) 1: Output the signal from CN1-25! 26 output terminal 2: Output the signal from CN1-27! 28 output terminal 3: Output the signal from CN1-29! 30 output terminal 4: Output the signal from CN1-37! 38 output terminal
	Bit1: Second position output comparison	—	0: Disabled (The signal is not output) 1: Output the signal from CN1-25! 26 output terminal 2: Output the signal from CN1-27! 28 output terminal 3: Output the signal from CN1-29! 30 output terminal 4: Output the signal from CN1-37! 38 output terminal

	Bit2: The third position output comparison	—	0: Disabled (The signal is not output) 1: Output the signal from CN1-25! 26 output terminal 2: Output the signal from CN1-27! 28 output terminal 3: Output the signal from CN1-29! 30 output terminal 4: Output the signal from CN1-37! 38 output terminal
	Bit3: Fourth position output comparison	—	0: Disabled (The signal is not output) 1: Output the signal from CN1-25! 26 output terminal 2: Output the signal from CN1-27! 28 output terminal 3: Output the signal from CN1-29! 30 output terminal 4: Output the signal from CN1-37! 38 output terminal

5.12.3 Function Running

1) Function Principle

Position comparison COMPARE is to use the instantaneous position data fed back by the servo to compare with the value stored in the target position array in advance. When the comparison condition is satisfied, it will immediately output a DO pulse signal (Number of DO and the pulse width can be configured) , used for the follow-up motion control. Since the comparison is done inside the FPGA, no software data communication delay, and accurate comparison can also be done for high-speed motion axes.

Position comparison output function: When the value 0 of the position comparison output function Pn610 changes to 1/2/3, the comparison starts. When Pn610 becomes 0, the comparison ends immediately, and the current comparison status is cleared.

Position comparison output width: When the position comparison condition is satisfied, output DO active level signal, the width of the active level signal can be set through Pn 619/Pn 61A/Pn61B/Pn61C. Setting range: 0 -65535 × 0.125 ms.

Target position comparison point: There are 4 target position comparison points in total, and the target position comparison value needs to be set to the Pn611/Pn613/Pn615/Pn617 target parameters in advance.

(2) Functional operation

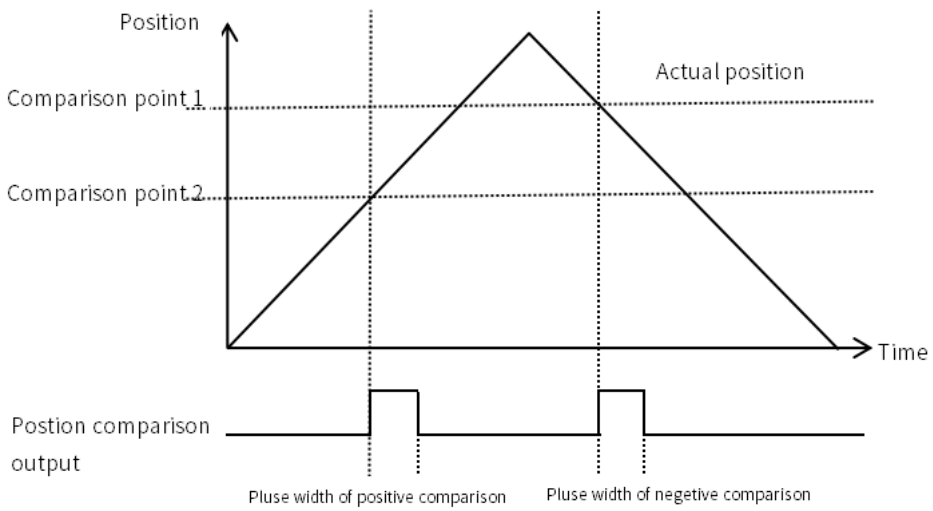

Figure 5-37 Operation Chart

When Pn610 is set to 1-positive comparison output, when the axis passes the target position comparison point and the position relationship changes from low to high, DO outputs position comparison signal.

When Pn610 is set to 2- reverse comparison output, when the axis passes the target position comparison point and

the position relationship changes from low to high, DO outputs position comparison signal.

When Pn610 is set as 3- two-way comparison output, the signal output is independent of passing direction of the axis. When the target position comparison point is passed and the position relationship changes, DO outputs a position comparison signal.

5.13 Gravity Compensation

When the Servo motor is used with a vertical axis, gravity compensation prevents the moving part from falling due to the machine' s own weight when the brake is released.

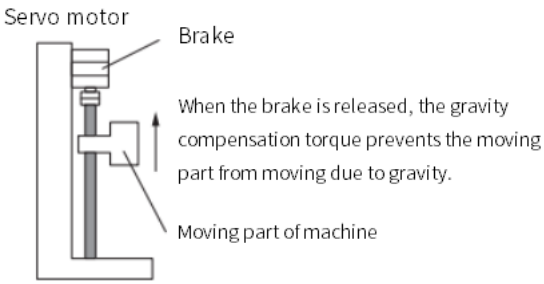

Figure 5-38 Operating Diagram

A timing chart for when the moving part is raised then lowered is provided below.

For details of the brake operating time, please refer to the following chart

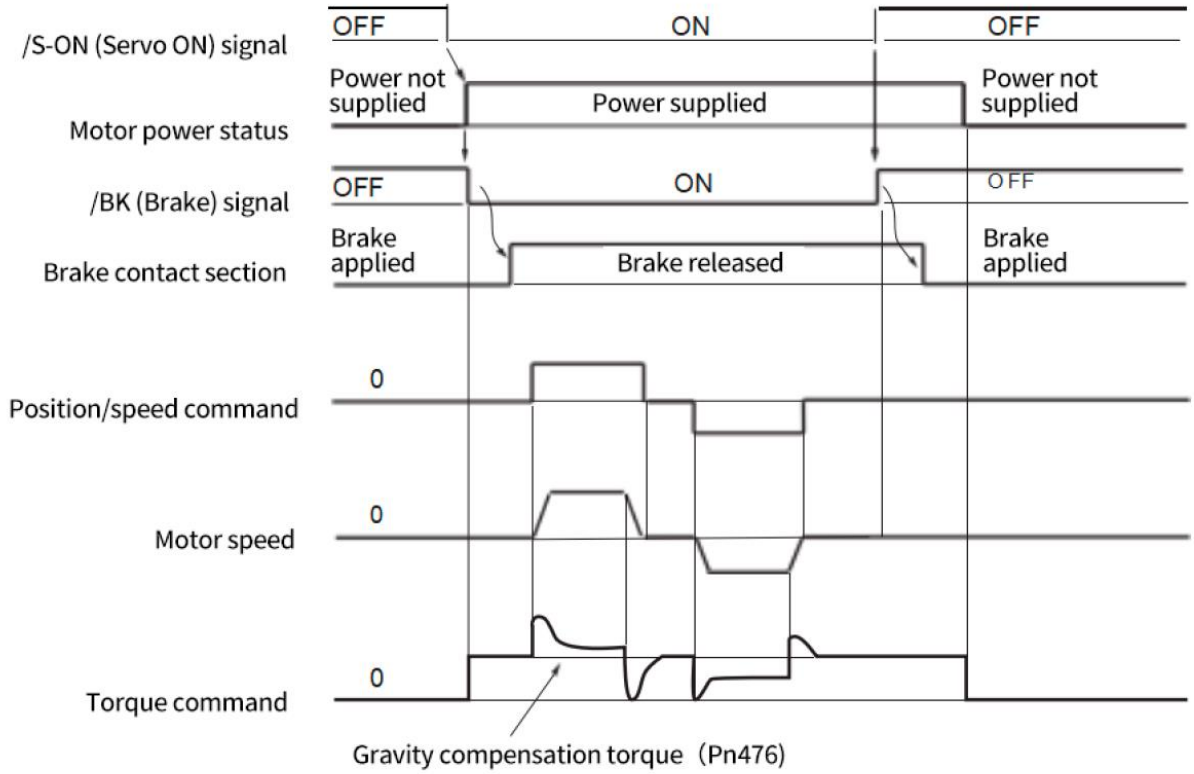

Figure 5-39 Brake Application Timing Chart

5.13.1 Required Parameters Settings

To use the gravity compensation function, the following parameters are required

Table 5-110 Parameter Setting

Parameter	Description			When Enabled
Pn609.1=0	Disable gravity compensation.			After restart
Pn609.1=2	Enable gravity compensation.			
Pn476	Setting Range	Setting Unit	Default Setting	When Enabled
	-1000 to 1000	0.1%	0	Immediately

5.13.2 Operating Procedure for Gravity Compensation

The operating procedure of the gravity compensation function are as follows.

1. Set Pn609.1 = 2 (Enable gravity compensation).
2. To enable changes to the settings, turn the power of the servo unit OFF and ON again.
3. Use the Y7 host controller software HCServoWorks.Y7 to find the torque command value when the motor is stopped with the servo ON
4. Set the torque command value found in step 3 in Pn476 (Gravity Compensation Torque).
5. Turn servo ON/servo OFF several times, and fine-tune Pn476, so that the moving part of machine does not fall.

5.14 Other input and output signals

5.14.1 Input Signal Allocations

After changing the input signal, please set Pn50A = n.□□□1 (Input Signal Allocation Mode)

Table 5-111 Pn50A = n. □□□1 (Input Signal Allocation Mode) Parameter Setting

Parameter		meaning	When Enabled	Classification
Pn50A (Input signal selection 1)	n.□□□0 (default setting)	Use the sequence input signal terminals with the default allocations.	After restart	Setup
	n.□□□1	Change the individual sequence input signal allocations.		

5.14.2 Alarm Output (ALM) Signal

This signal is output when the servo unit detects an error.

Table 5-112 Alarm Signal Output

Type	Signal	Connector Pin No.	Status	Meaning
Output	Alarm output (ALM)	CN1-31, CN1-32	ON (closed)	Normal status
			OFF (open)	Servo unit alarm

5.14.3 Warning Output (/WARN) Signal

Both alarms and warnings are generated by the servo unit. Alarms indicate errors in the servo unit for which operation must be stopped immediately. Warnings indicate situations that may results in alarms but for which stopping operation is not yet necessary

Table 5-112 Warning Signal Output

Type	Signal	Connector Pin No.	Status	Meaning
Output	Warning output (/WARN)	Must be allocated	ON (closed)	Warning
			OFF(open)	Normal status

5.14.4 Alarm Reset (/ALM-RST) Signal

The /ALM-RST (Alarm Reset) signal will not always reset encoder-related alarms. If you cannot reset an alarm with the /ALM-RST signal, turn OFF the control power supply to reset it.

Table 5-114 Alarm Reset Signal Input

Type	Signal	Connector Pin No.	When Enabled	Classification
Input	Alarm reset(/ALM-RST)	CN1-44 (default setting)	After restart	Setup

5.14.5 Rotation Detection Output Signal (/TGON)

This signal is output when the shaft of the servo motor rotates faster than the setting of Pn502

Table 5-115 Rotation Detection Output

Type	Signal	Connector Pin No.	Status	Meaning
Output	Rotation detection output signal (/TGON)	CN1-27,CN1-28 (default setting)	ON(closed)	The Servo motor is operating faster than the setting of Pn502
			OFF(open)	The Servo motor is operating slower than the setting of Pn502

Rotation Detection Output (/TGON) Parameters:

Use the following parameter to set the speed detection level at which to output the /TGON signal.

Table 5-116 Pn502(Rotation Detection Level) Parameter Setting

Pn502	Rotation Detection Level		Speed Position Torque	When Enabled	Classification
	Setting Range	Setting Unit	Default Setting	Immediately	Setup
	0-10000	1 min^{-1}	20		

5.14.6 Servo Ready Output (/S-RDY) Signal

The /S-RDY (Servo Ready) signal turns ON when the servo unit is ready to accept the /S-ON (Servo ON) input signal.

Table 5-117 Servo Ready Signal Output

Type	Signal	Connector Pin No.	Status	Meaning
Output	Servo ready signal (/S-RDY)	CN1-29,CN1-30 (default setting)	ON(closed)	Ready to receive the /S-ON (Servo ON) signal.
			OFF(open)	Not ready to receive the /S-ON (Servo ON) signal.

Note: 1. When using an absolute value encoder, The /S-RDY (Servo Ready) signal turns ON when the servo unit is ready to accept the SEN(Absolute Data Request) signal.

2. The /S-RDY signal is turned ON when the main circuit power is ON, there is no hard wire base block state, and there is no alarms

Chapter 6 Tuning

Chapter 6 Tuning.....154
6.1 About Tuning 156
6.1.1 Basic Tuning Method..... 156
6.1.2 Monitoring during Tuning..... 156
6.1.3 Safety Precautions at Tuning..... 158
6.2 Tuning-less Function.....160
6.2.1 About the Tuning-less Function 160
6.2.2 Tuning-less Value Setting (Fn200)..... 162
6.2.3 Related Parameters..... 163
6.3 Advanced Auto Tuning 1 - By HCServoWorks Internal Position Command.....163
6.3.1 About Auto Tuning 1..... 164
6.3.2 Precautions for Advanced Auto-tuning 1..... 166
6.4 Advanced Auto-Tuning 2 - Via Host Controller Position Commands 167
6.4.1 About Advanced Auto- tuning 2..... 167

6.4.2 Precautions for Advanced Auto tuning 2 169
6.5 One-parameter Tuning 169
6.5.1 About One-parameter Tuning 170
6.5.2 Operation Steps for One-parameter Tuning 170
6.6 Supplements for Auto-tuning 170
6.6.1 Supplements for Function 170
6.6.2 Related Parameters 172
6.7 Adjust Anti-resonance Control Function 173
6.7.1 About Adjust Anti-resonance Control Function 173
6.7.2 Operation Steps of Anti-resonance Control Function 173
6.7.3 Related Parameters 174
6.8 Vibration Suppression Function 174
6.8.1 About the Vibration Suppression Function 174
6.8.2 Precautions for Vibration Suppression Function 175
6.8.3 Related Parameters 176
6.9 Adjustment Application Function 176
6.9.1 Gain Switching 176
6.9.2 Manual Adjustment of Friction Compensation 180
6.9.3 Current Control Mode Selection Function 181
6.9.4 Current Gain Value Setting Function 181
6.9.5 Speed Detection Method Selection 181
6.10 Other Adjustments Functions 182
6.10.1 Feedforward 182
6.10.2 P (Proportional) control 182
6.10.3 Setting Mode Switch (P control/PI control switching) 183
6.10.4 Torque Command Filter 184

6.1 About Tuning

Tuning is used to optimize the response of the servo system through multiple parameters (speed loop gain, position loop gain, filter, friction compensation, moment of inertia ratio, etc.). Therefore, when setting the servo gain, you have to consider the balance between the setting values of various parameters.

The factory setting of the servo gain is stable. According to the status of the user's machine, the following auxiliary functions can be used to adjust the servo gain to further improve response. Advanced auto-tuning function is the latest gain control algorithm of Y7S series servo dirve. After using this function, the above-mentioned parameters will be automatically adjusted. Therefore, it is usually not necessary to adjust separately.

6.1.1 Basic Tuning Method

The table below provides a description of the auxiliary functions related to the adjustment. Please select according to the status and operating conditions of the machine you are using.

Table 6-1 Auxiliary functions

Auxiliary functions	Overview	Available control mode	Operating tool	
			Panel operator	HCServoWorks
Tuning-less (Fn200)	The setting of this function is invalid by default. If need to use this function, please set Pn170.0=1 . Stable response can be obtained regardless of the type of machinery and load fluctuations.	Speed control Position control	✓	✓
Advanced Auto tuning 1 (Internal command)	When the automatic gain tuning function 1 is on, the servo drive will perform the following automatic adjustments. (recommended to use this function) • Moment of inertia ratio • Gain (position loop gain, speed loop gain, etc.) • Filter (torque command filter, notch filter) • Friction compensation •Adjust Anti-resonance Control • vibration suppression	Speed control Position control	x	✓
Advanced Auto tuning 2 (Host controller command)	When the automatic gain tuning function 2 is on , the position command is input from the upper device, and the following automatic adjustments are performed. • Gain (position loop gain, speed loop gain, etc.) • Filter (torque command filter, notch filter) • Friction compensation • Adjust Anti-resonance Control • vibration suppression	Position control	x	✓
One-parameter tuning	Input the position command or speed command from the host device, and perform the following adjustments. • Gain (position loop gain, speed loop gain, etc.) • Filter (torque command filter, notch filter) • Friction compensation •Adjust Anti-resonance Control	Speed control Position control	△	✓
Adjust Anti-resonance Control function	To suppress vibration of 100~1000Hz	Speed control Position control	x	✓
Vibration suppression function	To suppress aftershock generated during positioning	Position control	x	✓

✓: Operable △: Operable, but some functions are limited × : Not operable

6.1.2 Monitoring during Tuning

When adjusting the servo gain, it is necessary to adjust while observing the operating state of the machine and the signal waveform. In order to observe the signal waveform, please connect the measuring instrument such as the memory recording device to the analog quantity monitoring connection port (CN5) of the servo drive.

The following are the settings and parameters related to the monitoring of analog signals.

1) Monitor signals that can be observed

The monitoring signals shown below can be selected through Pn006 and Pn007 .

Pn006 is used for analog monitoring 1 , and Pn007 is used for analog monitoring 2 .

Table 6-2 Monitoring signal parameters

Parameter		Content		
		Monitoring signal	Output unit	Remarks
Pn006 Pn007	n.□□00 [Factory setting of Pn007]	Motor Speed	1V/1000min $^{-1}$	-
	n.□□01	Speed Command	1V/1000min $^{-1}$	-
	n.□□02 [Factory setting of Pn006]	Torque Command	1V/100% rated torque	-
	n.□□03	Position Deviation	0.05V/1 command unit	0V during speed / torque control .
	n.□□04	Position Amplifier Deviation	0.05V/1 encoder pulse unit	Position deviation after setting the electronic gear ratio.
	n.□□05	Position Command Speed	1V/1000min $^{-1}$	Position command speed output by n times of the input command pulse.
	n.□□06	Reserved parameters (Do not change)	-	-
	n.□□07	Motor-Load Position Deviation	0.01V/1 command unit	-
	n.□□08	Positioning Completion	Position completed: 5V Positioning not complated: 0V	Completedd by the output voltage.
	n.□□09	Speed Feedforward	1V/1000min $^{-1}$	-
	n.□□0A	Torque Feedforward	1V/100% rated torque	-
	n.□□0B	Active Gain* 1	1st gain : 1V 2nd gain : 2V	Gain types are expressed in terms of output voltage.
	n.□□0C	Completion of Position Command Distribution	Output completed: 5V Positioning not complated: 0V	Completedd by the output voltage.
	n. □□0D	External Encoder Speed	1V/1000min $^{-1}$	Value calculated at the motor shaft

* 1 For details, please refer to "Switching Gain"

2) Set the analog monitor magnification

Set the Output voltage of analog monitoring 1 and 2 according to the following.

Output voltage of analog monitoring 1 =

(-1)×{Analog monitor 1 signal selection(Pn007=n.00□□)×Analog monitor 1 magnification(Pn552)+Analog monitor 1 offset voltage(Pn550)}

Output voltage of analog monitoring 2=

(-1) ×{Analog monitor 2 signal selection(Pn007=n.00□□)×Analog monitor 2 magnification(Pn553)+Analog monitor 2 offset voltage(Pn551)}

3) Related parameters

Change the Monitor magnification and offset by the following parameters.

Table 6-3 Related parameters

Pn550	Analog Monitor 1 Offset Voltage Speed Position Torque			When enabled	Classification
	Setting range	Set unit	Factory setting	Immediately	Setup
	-10000 ~ 10000	0.1V	0		
Pn551	Analog Monitor 2 Offset Voltage Speed Position Torque			When enabled	Classification
	Setting range	Immediately	Factory setting	Immediately	Setup
	-10000 ~ 10000	0.1V	0		
Pn552	Analog Monitor 1 Magnification Speed Position Torque			When enabled	Classification
	Setting range	Immediately	factory setting	Immediately	Setup
	-10000 ~ 10000	x0.01	100		
Pn553	Analog Monitor 2 Magnification Speed Position Torque			When enabled	Classification
	Setting range	Immediately	Factory setting	Immediately	Setup
	-10000 ~ 10000	x0.01	100		

<Example>

Analog monitoring output when setting the Motor Speed (n.00 □□)

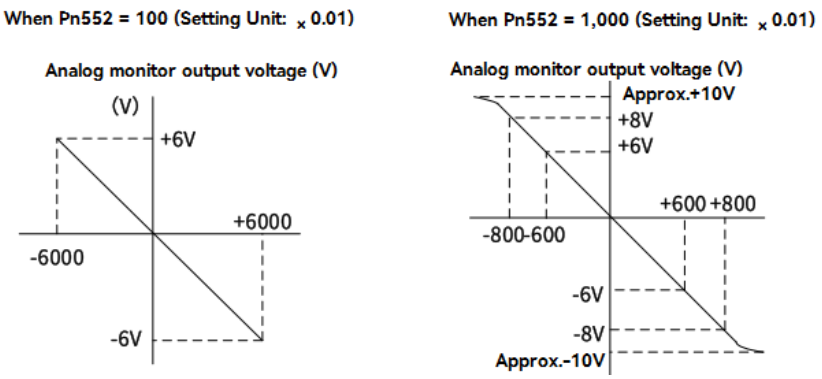

Figure 7-1 Analog detection output

6.1.3 Safety Precautions at Tuning

When making adjustments, be sure to observe the following precautions.

- Do not touch the rotating part of the motor while the servo is ON and the servo motor is running.
- When the servo motor is running, please make sure it can be stopped in an emergency at any time.
- Make adjustments after confirming that the test run is completed normally .
- To ensure safety, install a stop device on the machine side.

When making adjustments, please set the protection functions shown in the following items (1) to (5) under appropriate conditions.

1) Overtravel setting

Please set the overtravel. For details, refer to " Section 5. 3. 5 Overtravel Setting ".

2) Torque limit setting

The torque limit function is a function that calculates the torque required for machine operation and limits the output torque so that it does not exceed the setting range. Shock can be reduced in the event of mechanical failure such as interference or collision. If the torque is lower than the value required for operation, overshoot or vibration may occur.

3) Set the alarm value of excessive position deviation

The excessive position deviation alarm is an effective protection function when the servo drvie is used for position control.

When the servo motor action does not match the command, by setting an appropriate alarm value for excessive position deviation, the error can be detected and the servo motor will stop running.

The position deviation refers to the difference between the value of position command and the actual position.

Relationship between the Position loop gain (Pn102) and the Motor speed below .

① Please refer to " Section 5.5.4 Electronic Gear Ratio".

The calculation example when $Pn102=400\ \frac{Pn20E}{Pn210}=\frac{1}{1}$

$$Pn520=\frac{600}{60}\times\frac{1048576}{400/10}\times\frac{1}{1}\times2=2621440\times2$$

$$=5242880(Pn520\ Factory\ setting)\times\ (1.2\sim2)$$

② When confirming the setting value of Pn102, please set the parameter display to "Display all parameters" (Pn00B.0 = 1).

$$\text{Position deviation “Command unit”}=\frac{Motor\ Speed[min^{-1}]}{60}\times\frac{Encoder\ resolution*1}{\frac{Pn102\left[\frac{0.1}{s}\right]}{10}*2}\times\frac{Pn20E}{Pn210}$$

Alarm value for excessive position deviation (Pn 520) [setting unit: 1 command unit]

$$Pn520>\frac{Max.\ Motor\ Speed[min^{-1}]}{60}\times\frac{Encoder\ resolution*1}{\frac{Pn102\left[\frac{0.1}{s}\right]}{10}*2}\times\frac{Pn20E}{Pn210}\times(1.2\sim2)$$

" ×(1.2～2)" in the double underlined part is the surplus coefficient to avoid frequent occurrence of excessive position deviation alarm (A.d00).

As long as make the setting as above, the excessive position deviation alarm will not occur during normal operation.

When a position deviation occurs because the motor action does not match the command, an abnormal situation will be detected and the motor will stop running.

When the acceleration and deceleration of the position command exceeds the tracking capability of the servo motor, the position deviation cannot satisfy the above relational expression. Please reduce the acceleration and deceleration of the position command to the value that the motor can track, or increase the alarm value of excessive position deviation.

Table 6-4 Parameters for setting the alarm value of excessive position deviation

Pn520	Position Deviation Overflow Alarm Level Position			When enabled	Classification
	Setting range	Unit	Factory setting	Immediately	Setup
	1 ~ 1073741823	1 command unit	5242880 0		

Table 6-5 Alarm No.

Alarm number	Name	Content
A.d00	Position Deviation Overflow	The alarm displayed when the position deviation exceeds the Position Deviation Overflow Alarm Level (Pn520).

4) Set the vibration detection function

Set an appropriate value for the vibration detection function. For details, refer to " Section 7.15 Initialize Vibration Detection Level (Fn01B)".

5) Set the position deviation excessive alarm value when the servo is ON

If the position deviation is accumulating and turnon the servo, the servo motor will return to the original position in order to make the position deviation "0", which will cause danger. In order to avoid this kind of situation, the alarm value of excessive position deviation can be set when the servo is ON.

The relevant parameters and alarms are shown below.

Table 6-6 Set the parameters of excessive position deviation when the servo is ON

Pn526	Position Deviation Overflow Alarm Level at Servo ON Position			When enabled	Classification
	Setting range	Unit	Factory setting	Immediately	Setup
	1 ~ 1073741823	1 command unit	5242880 0		
Pn528	Position Deviation Overflow Warning Level at Servo ON Position			When enabled	Classification
	Setting range	Unit	Factory setting	Immediately	Setup
	10 ~ 100	1%	100		
Pn529	Speed Limit Level at Servo ON Position			When enabled	Classification
	Setting range	Unit	Factory setting	Immediately	Setup
	0 ~ 10000	$1min^{-1}$	10000		

Table 6-7 Alarm No.

Alarm No.	Alarm name	Content
A.d01	Position Deviation Overflow Alarm at Servo ON	This is an alarm displayed when trying to turn on the servo while the position deviation is greater than the setting value of Pn526 during servo OFF.
A.d02	Position Deviation Overflow Alarm for Speed Limit at Servo ON	If the servo is ON while the position deviation is accumulating, the speed will be limited by the Speed Limit Level at Servo ON (Pn529) at servo ON. Input the command pulse in this state, and the alarm will be displayed when the setting value of Position Deviation Overflow Alarm Level (Pn520) is exceeded.

6.2 Tuning-less Function

Tuning-less function is set to "invalid" at the factory setting . If you use the Tuning-less function, please set Pn170.0=1. When resonance sound or vibration occurs, please change the rigidity value (Pn170.2) and load value (Pn170.3) through " Section 6.2.2 Operation Steps of Tuning-less Level Setting (Fn200)".

Note: 1. The Tuning-less function is set to "invalid" at the factory. If you use the Tuning-less function, please set Pn170.0=1. After the servo drive is installed on the machine, there will be a momentary sound when the servo is turned ON for the first time. This is the sound when the automatic notch filter is set, and it is not a malfunction. There will be no sound when the servo is turned ON next time. For details on the automatic notch filter, refer to "(3) About setting the automatic notch filter".

2. The servo motor may vibrate when used beyond the allowable moment of inertia of the load. At this time, please set Mode = 2 through Fn200, or lower the tuning value.

6.2.1 About the Tuning-less Function

The Tuning-less function is to obtain a stable response through automatic adjustment regardless of the type of machine or load fluctuations.

1) Set the Tuning-less function to be valid/invalid

Tuning-less function can be set by the following parameters.

Table 6-8 Parameters of the Tuning-less function

Parameter	Contents	When enabled	Classification
n.□□□0 (Factory setting)	Disable the Tuning-less function	After restart the power supply	Setup
n.□□□1	Enable the Tuning-less function		
n.□□0□ (Factory setting)	Used as speed control		
n.□□1□	For speed control, position control		

2) Restrictions on usage

The Tuning-less function is valid for position control and speed control, but invalid during torque control.

Meanwhile, when the Tuning-less function is enabled, the control functions shown in the table below are partially restricted.

Table 6-9 Parameters of the Tuning-less function

Function name	Executable/not executable	Executable Conditions and Remarks
Initialize Vibration Detection Level (Fn01B)	✓	—
Advanced Auto tuning 1	△	•Can be selected only at estimated moment of inertia. • To be invalid at the Tuning-less function executed , and becomes effective after Tuning-less function ends.
Advanced Auto tuning 2	x	—
One-parameter tuning	x	—
Anti-Resonance Control Adjustment	x	—
Vibration Suppression Function	x	—
EasyFFT	✓	—
Friction Compensation	x	—
Gain Switching	x	—
Estimated Off-line Moment of Inertia (operated via HCServoWorks)	x	Operate after disable the Tuning-less function (Pn170.0 = 0) .
Mechanical Analysis (operated via HCServoWorks)	✓	Operate after disable the Tuning-less function (Pn170.0 = 0) .

✓: Operable △: Operable, but some functions are limited × : Inoperable

3) About setting the automatic notch filter

Generally, set it to "Automatic adjustment" (by default).

At "automatic adjustment", vibration will be detected automatically when the Tuning-less function is enabled, and the notch filter will be set.

Please set it to "Do not adjust automatically" only when you do not change the notch filter setting.

Table 6-10 Setting automatic notch filter parameters

Parameter		Contents	When enabled	Classification
Pn460	n.□0□□	Automatic adjustment of the 2nd notch filter without auxiliary functions	Immediately	Setup
	n. □1□□ (Factory setting)	Automatic adjustment of the 2nd notch filter by auxiliary function		

4) About the Tuning-less value

The Tuning-less values : "Rigidity value" and "Load value". The adjustment value can be selected using the auxiliary function (Fn200) or the parameter setting (Pn170) .

Table 6-11 Rigidity values

Parameter		Contents	When enabled	Classification
Pn170	n.□0□□ (Factory setting)	Rigidity value 0 (Level0)	Immediately	Setup
	n. □1□□	Rigid value 1 (Level1)		
	n.□2□□	Rigid value 2 (Level2)		
	n.□3□□	Rigid value 3 (Level3)		
	n.□4□□	Rigid value 4 (Level4)		

Table 6-12 Load values

Parameter	Contents	When enabled	Classification

Pn170	n. 0□□□	Load value- lower (Mode0)	Immediately	Setup
	n. 1□□□ (Factory setting)	Load value- medium (Mode1)		
	n. 2□□□	Load value - higher (Mode2)		

6.2.2 Tuning-less Value Setting (Fn200)

The procedure for setting the Tuning-less value is as follows.

The Tuning-less value can be set by the operational panel or HCServoWorks.

1) Confirmation before execution

Please confirm the following settings before performing Tuning-less value. If the setting is not satisfied, " NO_OP " will be displayed during operation .

- Select Tuning-less to be valid (Pn170.0 = 1).
- The Write Prohibition Setting (Fn010) is disabled.

2) Operations steps via the operation panel

①Press Ⓜkey to switch to Auxiliary function mode "FN000"

②Press Ⓐor Ⓥ key to "FN200"

③After long-pressing Ⓢ for 1 sec., switch to the load value of tuning-less "d 1"

④Press Ⓜkey to switch to the rigidity setting screen of tuning-less" L 4 "

⑤Press Ⓐ or Ⓥ key to select the rigidity value. The higher the value, the higher the gain and the higher the response. (Factory setting:4)

●Vibration may occur when the rigidity value is too large. At this time, lower the rigidity value.

●When a high tone occurs, pressⓈ to automatically adjust the frequency of the notch filter to the vibration frequency.

⑥Press Ⓜkey, the status display will change to "donE" and flashes for about 1 sec., then displays "L0004" . And the setting will be stored in the servo drive.

⑦Press Ⓢ for about 1 sec., then return to "FN200" .

Note: If overshoot occurs in the waveform, or when the load moment of inertia exceeds the allowable load (not subject to product warranty), press the key to change the load value to "2".

3) Alarm and treatment method

When a resonance sound occurs or a large vibration occurs in position control, an Auto-tuning Alarm (A.521) may appear. In this case, perform the following steps.

- When resonance sound occurs

Decrease the setting value of Mode or Level through Fn200.

- When large vibration occurs during position control

Increase the setting value of Mode or Level through Fn200. It is also possible to increase the setting value of Pn170.3 or decrease the setting value of Pn170.2 through parameter setting.

4) Parameters that make Tuning-less function become invalid

When the Tuning-less function is valid, the parameters Pn100, Pn101, Pn102, Pn103, Pn104, Pn105, Pn106, Pn160, Pn139, and Pn408 in the table below are invalid.

However, when the functions shown in the table below are executed, the above parameters related to gain may become valid.

For example, when Easy FFT is executed when the Tuning-less function is valid, the setting values of parameters Pn100, Pn104, Pn101, Pn105, Pn102, Pn106, Pn103 and the Manual gain switching are valid, and the setting value of Pn408.3, Pn160.0 and Pn139. 0 are invalid.

Table 6-13 Parameters that make Tuning-less function become invalid

Parameters that make Tuning-less function become invalid			Executed functions and valid parameters		
Items	Parameter	Parameter No.	Torque control	EasyFFT	Mechanical Analysis (Vertical Axis Mode)
Gains	Speed Loop Gain 2nd Speed Loop Gain	Pn100 Pn104	✓	✓	✓
	Speed Loop Integral Time Constant Second Speed Loop Integral Time Constant	Pn101 Pn105	x	✓	✓
	Position Loop Gain 2nd Position Loop Gain	Pn102 Pn106	x	✓	✓
	Moment of Inertia Ratio	Pn103	✓	✓	✓
Advanced Control	Friction Compensation Function Selection	Pn408.3	x	x	x
	Anti-Resonance Control Selection	Pn160.0	x	x	x
Gain switching	Gain Switching Selection	Pn139.0	x	x	x

✓: The parameter setting value is valid ×: The parameter setting value is invalid

6.2.3 Related Parameters

The following 3 items are shown in the table below.

•Parameters associated with this function

The parameters used or referenced when executing this function.

• Is it possible to change the setting value of the parameter when executing this function?

"No": Parameters cannot be changed through HCServoWorks etc. when executing this function.

"Yes": Parameters can be changed through HCServoWorks etc. when executing this function.

• Whether there is automatic setting of parameters after executing this function

"Yes": After executing this function, the parameter setting value will be automatically set or adjusted.

"No": After executing this function, the parameter setting value will not be automatically set or adjusted.

Table 6-14 Parameters asbout Tuning-less function

Parameter	Name	Possible to change the setting value	Automatic setting
Pn170	Tuning-less Function	No	Yes
Pn401	1st Stage 1st TorqueCommand Filter Time Constant	No	Yes
Pn40C	2nd Stage Notch Filter Frequency	No	Yes
Pn40D	2nd Stage Notch Filter Q Value	No	Yes

6.3 Advanced Auto Tuning 1 - By HCServoWorks Internal Position Command

This section explains how to perform adjustments with advanced auto tuning 1.

Note: 1. Advanced auto tuning 1 controls the operation of the mechanism through the internal position command of the HCServoWorks software. Pay attention to the safety distance and mechanical collision when using it.

2. When using advanced auto tuning 1, please ensure that the Tuning-less function Pn170.0=0.

3. Advanced auto-tuning 1 starts to adjust based on the currently set speed loop gain (Pn100). Therefore, if vibration occurs at the start of adjustment, correct adjustment will not be possible.

At this time, please reduce the Speed Loop Gain (Pn100) until the vibration disappears

4. After performing advanced auto-tuning 1, if the advanced auto-tuning of "estimated load moment of inertia" is performed again due to changes in the load state and transmission mechanism of the machine, please change the following parameters number, and set all the set

values after the last adjustment to be invalid. If advanced auto-tuning 1 is performed without changing the parameters, it may cause mechanical vibration or damage.

① Pn00B.0 = 1 (Display all parameters)
② Pn140.0 = 0 (Do not use model tracking control)
③ Pn160.0 = 0 (Adjust Anti-resonance Control is not used)
④ Pn408 = n.00 □0 (Do not use friction compensation, 1st or 2nd notch)

5. The operation of Advanced Auto tuning 1 can be performed through HCServoWorks. This function cannot be operated through the operation panel.

Table 6-15 Description of tuning mode

Mode	Content
Mode 1	Adjust gain, notch filter, A-mode vibration
Mode 2	Adjust the gain, model tracking, notch filtering, Anti-Resonance, and vibration suppression
Mode 3	Adjust gain, notch filter, Anti-Resonance, and vibration suppression

6.3.1 About Auto Tuning 1

Advanced auto tuning 1 refers to the function that the servo drive automatically adjusts according to the mechanical characteristics when performing automatic operation (forward and reverse reciprocating motion) within the setting range.

Advanced auto tuning can be performed without connecting a host controller.

The operation specifications of automatic operation are as follows.

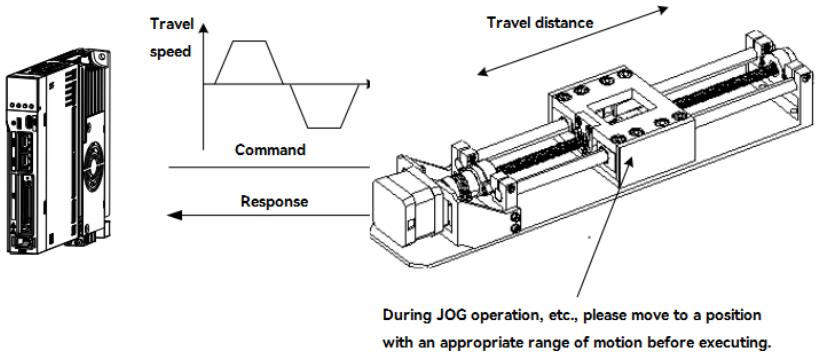

Figure 6-2 Automatic operation specification

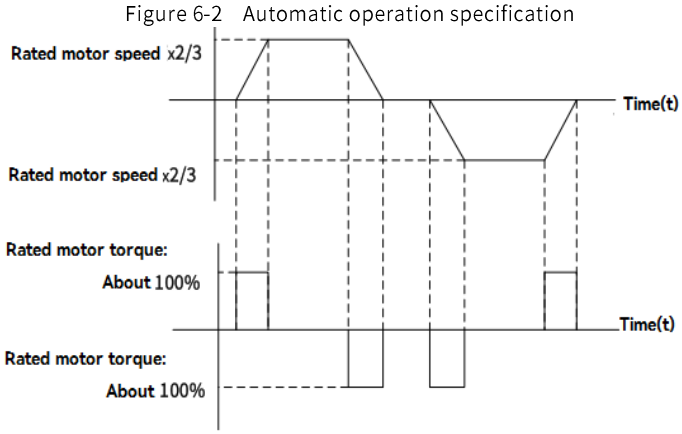

Figure 6-3 Example of automatic operation

• Maximum speed: Motor rated speed × (2/3)

• Acceleration torque: About 100% of the rated torque of the motor.

Acceleration torque will change according to the setting of Moment of Inertia Ratio (Pn103), mechanical friction, and

external disturbance.

• Travelling distance: Can be set arbitrarily. The factory setting is equivalent to 3 revolutions of the servo motor.

Items of advanced Auto tuning 1:

• Moment of inertia ratio.

• Gain adjustment (speed loop gain, position loop gain, etc.).

• Filter adjustment (torque command filter, notch filter).

• Friction compensation.

• Anti-Resonance Control Adjustment.

• Vibration suppression (only when Mode = 2 or 3).

Note: Advanced Auto tuning 1 performs adjustments in automatic operation mode, so vibration or overshooting may occur during operation. In order to ensure safety, please execute the advance auto tuning in the state of emergency stop at any time.

Confirmation items before execution

Before performing advanced auto tuning 1, be sure to confirm the following settings. When the following items are not set, the operation will display "NO_OP " :

• The main circuit power supply must be ON

• Servo must be OFF

• Forward-rotation prohibition (P-OT), reverse-rotation prohibition (N-OT) must not be in an overtravel state

• The clear signal must be L level (not cleared)

• Not for torque control

•The gain switching selection is manual gain switching (Pn139.0 = 0).

•The 1st gain is selected.

•No servo motor test function selection is invalid (Pn00C.0 = 0).

•No alarms or warnings occurred.

•Hardwired base block function (HWBB) is invalid

• Auto gain switching must be disabled

• Write Prohibition should be disabled(Fn010)

•Set the Tuning-less function to be invalid (Pn170.0 = 0)

＜Supplement＞

• When the advanved auto-tuning is performed under speed control, it will automatically switch to position control. And return to speed control after adjustment .

In the following cases, advanced auto tuning 1 cannot be performed normally. Please adjust with advanced auto tuning 2 or One-parameter tuning.

• When a mechanical system can only operate in one direction.

• The range of activity is narrow, and it is below 0.5 circles.

Advanced auto-tuning 2 → refer to "Section 6.4 Advanced Auto-tuning 2".

One-parameter tuning → refer to " Section 6.5 One-parameter Tuning".

Adjustment with advanced auto tuning 1 cannot be performed smoothly in the following cases. Please adjust with advanced auto tuning 2 or One-parameter tuning.

• When an appropriate range of motion cannot be obtained.

• When the moment of inertia fluctuates within the setting range.

• When the dynamic friction of the machine is large.

• When the rigidity of the machine is low and vibration occurs during the positioning operation.

• When using the position integration function.

• During P (proportional) control.

Note: When set to "Estimated Moment of Inertia", "Error" will be displayed during the process of estimated the moment of inertia, or when switching to P control via the /P-CON signal.

- When using the mode switch.

Note: When set to "Estimated moment of inertia", the mode switch function becomes invalid during the process of estimating the moment of inertia, and becomes PI control. Mode switch function becomes valid again after the moment of inertia estimation is completed.

.

- When Speed feedforward and Torque feedforward are input.
- When the Positioning Completion Width (Pn522) is narrow.

Advanced auto-tuning 2 → Refer to " Section 6.4 Advanced auto-tuning 2".

One-parameter tuning → Refer to " Section 6.5 One-parameter tuning".

Fine-tuning the overshoot without changing the positioning Completion Width (Pn522) , use the overshoot detection value (Pn561). Since the factory setting of Pn561 is 100%, it is allowed to adjust up to the same overshoot as the positioning completion width. If changed to 0%, the adjustment can be performed without overshoot within the positioning completion width. However, after changing this value, the positioning time may be extended.

Table 6-16 Overshoot detection value parameters

Pn561	Overshoot Detection Value		Speed Position Torque	When enabled	Classification
	Setting range	Unit	Factory setting	Immediately	Setup
	0-100	1%	100		

6.3.2 Precautions for Advanced Auto-tuning 1

The operation of Advanced Auto-tuning 1 can only be performed by HCServoWorks software. This function cannot be operated through the operation panel.

1) The causes and countermeasures when error occurs in advanced auto-tuning 1

Table 6-17 " NO_OP" flashing display

Reason	Countermeasures
Main circuit power OFF	Turn on the main circuit power supply
An alarm or warning has occurred	Troubleshooting the cause of an alarm or warning
Overtravel occurred	Troubleshooting the cause of overtravel
The 2nd gain is selected by gain switching	Disable auto gain switching
HWBB function action	Disable HWBB function
When the Tuning-less function is enabled	Turn off the Tuning-less function, and set P n170.0 to 0

Table 6-18 When "Error" is blinking

Error content	Reason	Countermeasures
Gain adjustment not completed normally	Mechanical vibration occurs, or the positioning completion signal (/COIN) is unstable when the motor stops	•Increase the setting value of Pn522. • Change the mode from "Mode = 2" to "Mode = 3". •When mechanical vibration occurs, please use the Anti-Resonance adjustment function and vibration suppression function to suppress the vibration.
Error during moment of inertia estimation	Please refer to the following table "When an error occurs in estimatied moment of inertia".	
Movement distance setting error	The movement distance is below the minimum adjustable movement distance (approximately 0.5 turn)	Increase movement distance. (The recommended number of rotations of the motor shaft is about 3 turns.)

Within 10 seconds after the positioning adjustment is completed, the positioning completion signal (/COIN) is not turned ON	The setting of the positioning completion width is too small, or the P control is selected.	•Increase the setting value of Pn522. •Turn OFF the /P-CON signal.
The Tuning-less function is enabled, but the estimated moment of inertia is not executed	The Tuning-less function is enabled, set to " Estimated moment of inertia (OFF)"	• Make Tuning-less function invalid. •Set to "Estimated moment of inertia (ON)".

2) When an error occurs in Estimated moment of inertia

The following explains the causes and countermeasures of errors that may occur in the "Estimated moment of inertia".

Table 6-19 Errors

Error display	Reason	Countermeasures
Err1	The estimation operation of the moment of inertia has started, but the estimation process has not been executed	•Increase the setting value of speed gain (Pn100) •Increase Stroke (moving distance)
Err2	The estimated value of the moment of inertia deviates too much, and the deviation has not decreased after 10 retries	Set the calculated value in Pn103 according to the machine specifications, and execute the estimation when the "Estimated moment of inertia OFF"
Err3	Low frequency vibration detected	Double the starting value of the estimated moment of inertia (Pn324)
Err4	Torque limit reached	•When using torque limit, increase the limit value • Double the starting value of the estimated moment of inertia (Pn324)
Err5	When /P-CON etc. is input, the speed control becomes P control during estimated moment of inertia.	Change to PI control

6.4 Advanced Auto-Tuning 2 - Via Host Controller Position Commands

This section explains how to perform adjustments with Advanced Auto Tuning 2. This function is controlled by the operation command (Pulse sequence command) of the upper device.

Note:

1. Advanced auto-tuning 2 is operated by the control mechanism of the upper device's operation command (Pulse sequence command). Pay attention to the safety distance and mechanical collision when using.

2. When using advanced auto-tuning 2, please ensure that the Tuning-less function Pn170.0=0 is turned off.

3. Advanced auto-tuning 2 starts to adjust based on the currently set speed loop gain (Pn100). Therefore, if vibration occurs at the start of adjustment, correct adjustment will not be possible.
At this time, please reduce the Speed Loop Gain (Pn100) until the vibration disappears.

4. After performing advanced auto-tuning 2, if the "Estimated moment of inertia" is performed again due to changes in the load state and transmission mechanism of the machine, please change the following parameters and set all the set values to be invalid. If advanced auto-tuning 2 is performed without changing the parameters, it may cause mechanical vibration ordamage.

① Pn00B.0 = 1 (Display all parameters)
② Pn140.0 = 0 (Do not use model tracking control)
③ Pn160.0 = 0 (Do not use Adjust Anti-resonance Control)
④ Pn408 = n.00 □0 (Do not use friction compensation, 1st or 2nd notch)

5. The operation of Advanced auto tuning 2 can be performed through HCServoWorks. This function cannot be operated through the operation panel.

6.4.1 About Advanced Auto- tuning 2

Advanced auto-tuning 2 is a method for automatically performing optimal adjustments to the operation command (pulse train command) from the host controller.

Advanced Autotuning 2 can also be used for additional adjustments after Advanced auto-tuning.

In addition, if the correct moment of inertia ratio is set in Pn103, we don’ t have to perform advanced auto-tuning and only perform the advanced auto-tuning 2.

Advanced Auto Tuning 2 makes adjustments to the following items.

•Gain adjustment (speed loop gain, position loop gain, etc.)

•Filter adjustment (torque command filter, notch filter)

•Friction compensation

• Adjust Anti-resonance Control

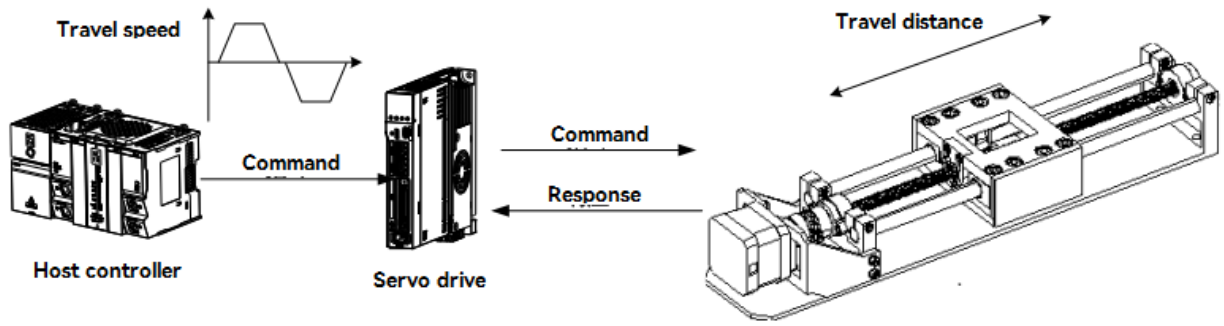

Figure 6-4 Example of automatic operation

Note: Advanced Autotune 2 performs automatic adjustment, so vibration or overshoot may occur during operation. To ensure safety, perform advanced tuning in a state where an emergency stop is possible at any time.

Confirmation items before operation

Before perform advanced auto tuning 2 , be sure to confirm the following settings. When the following items are not correct, the "NO_OP " will display:

• The main circuit power supply must be ON

• Ther servo must be OFF

• Prohibition of forward-rotation (P-OT), prohibition of reverse-rotation (N-OT) must not be in an overtravel state

•The gain switching selection switch is manual gain switching (Pn139.0 = 0).

•The 1st gain is selected.

•No motor test function selection is invalid (Pn00C.0 = 0).

•No alarms or warnings occurred.

•Hardwired base block function (HWBB) does not work

• Auto gain switch must be disabled

• Write Prohibition should be disabled(Fn010)

•Set the Tuning-less function to be invalid (Pn170.0 = 0)

•The servbo motor is in the Position control while the servo ON.

The advanced auto tuning 2 cannot be adjusted smoothly in the following cases. Please adjust by One-parameter tuning.

• When the movement amount indicated by the upper device command is the setting value of the positioning completion width (Pn522) or less.

• When the moving speed commanded by the upper device is the setting value of the rotation detection value (Pn502) or less.

• When the Stop time (the time during which the positioning complete signal (/COIN) is OFF) is 10ms or less.

• When the rigidity of the machine is low and vibration occurs during the positioning operation.

• When using the position integration function.

• During P (proportional) control.

- When using the mode switch.
- When the positioning completion width (Pn522) is narrow.

One-parameter tuning → refer to " Section 6.5 One-parameter Tuning".

Only use the overshoot detection value (Pn561) when fine-tuning the overshoot without changing the positioning completion range (Pn522). Since the factory setting of Pn561 is 100%, it is allowed to adjust up to the same overshoot as the positioning completion width. If changed to 0%, the adjustment can be performed without overshoot within the positioning completion width. However, after changing this value, the positioning time may be extended.

Table 6-21 Related Parameters about Advanced Auto Resonance 1

Pn561	Overshoot Detection Value		Position Speed Torque	When enabled	Classification
	Setting range	Unit	Factory setting	Immediately	Setup
	0-100	1%	100		

6.4.2 Precautions for Advanced Auto tuning 2

Advanced Auto tuning 2 operations can only be performed through HCServoWorks. This function cannot be operated through the operation panel.

The causes and countermeasures when the error occurs at performing advanced auto tuning 2 :

Table 6-22 When "NO_OP" is blinking

Reason	Countermeasures
Main circuit power OFF	Turn on the main circuit power
An alarm or warning has occurred	Troubleshooting the cause of an alarm or warning
Overtravel occurred	Troubleshooting the cause of overtravel
The 2nd gain is selected by gain switching	Disable auto gain switching
HWBB function action	Disable HWBB function

Table 6-23 Parameters about executing Advanced auto-tuning 2

Parameter		Content	When enabled	Classification
Pn160	n.□□0□	Adjust Anti-resonance Control without the use of auxiliary functions	Immediately	Tuning
	n.□□1□ (Factory setting)	Adjust Anti-resonance Control with auto tunning by auxiliary function		

Table 6-24 When "Error" is blinking

Error	Reason	Countermeasures
Gain adjustment not completed normally	Mechanical vibration occurs, or the positioning completion signal (/COIN) is unstable when the servo motor stops	•Increase the setting value of Pn522 • Change mode from "Mode = 2" to "Mode = 3" •When mechanical vibration occurs, please use theAnti-Resonance adjustment function and vibration suppression function to suppress the vibration
Positioning completion signal (/COIN) is not turned ON within 10 seconds after the positioning adjustment is completed	The setting of the positioning completion width is too small, or the P control is set	•Increase the setting value of Pn522 •Set /P-CON signal to OFF

6.5 One-parameter Tuning

This section explains how to adjust by One-parameter tuning.

6.5.1 About One-parameter Tuning

One-parameter tuning is a method of manually adjusting a speed command or a position command from a host device while running.

Adjusting one or two values through One-parameter tuning automatically adjusts the setting value of the associated gain.

One-parameter tuning has the following items.

- Gain adjustment (speed loop gain, position loop gain, etc.).
- Filter adjustment (torque command filter, notch filter).
- Friction compensation.
- Adjust Anti-resonance Control.

<Supplement>

If the response characteristics cannot be obtained with advanced auto tuning 1 or advanced auto tuning 2, use One-parameter tuning.

In addition, if you want to further fine-tune servo gain after One-parameter tuning, please refer to "Adjustment Application Function"

Note: Vibration or overshoot may occur during adjustment. To ensure safety, perform advanced tuning in a state where an emergency stop is possible at any time.

Confirmation items before execution:

Before perform One-parameter tuning , be sure to confirm the following settings. When the following items are not set, "NO_OP" will display:

- The test without a motor function must be disabled (Pn00C.0 = 0).
- Write Prohibition should be disabled(Fn010) .
- Set the Tuning-less function to be invalid (Pn170.0 = 0) .
- When performing tuning by speed control, set the tuning mode to 0 or 1.

6.5.2 Operation Steps for One-parameter Tuning

The operation steps of One-parameter tuning are as follows.

According to the selected adjustment mode, there are two operation procedures for One-parameter tuning.

•When Mode = 0 or 1 -Model tracking control is "invalid", and make adjustments except positioning.

•When Mode = 2 or 3 - Model tracking control is "valid", and make adjustments of positioning.

The operation of One-parameter tuning can be executed through the operation panel or HCServoWorks.

However, the operation panel can only be operated when the tuning mode is set to "Mode = 0", "Mode = 1".

Please operate after setting the Moment of Inertia Ratio (Pn103) correctly by advanced auto tuning.

6.6 Supplements for Auto-tuning

6.6.1 Supplements for Function

Automatic notch filter function:

Normally, please set to "Auto-tuning" (Factory setting: "Auto-tuning").

When set to "Auto-tuning", vibration will be detected automatically when this function is executed, and the notch filter will be adjusted.

Please set to "No auto-tuning" only when you do not change the notch filter setting.

Table 6-25 Parameters for Automatic notch filter

Parameter		Contents	When enabled	Classification
Pn460	n.□□□0	Auto tuning of the 1st-stage notch filter without auxiliary functions	Immediately	Tuning
	n.□□□1 (Factory setting)	Auto tuning of the 1st-stage notch filter by auxiliary function		
	n. □0□□	Auto tuning of the 2nd-stage notch filter without auxiliary functions		
	n. □1□□ (Factory setting)	Auto tuning of the 2nd-stage notch filter by auxiliary function		

Adjust Anti-resonance Control function:

Normally, please set to "Auto-tuning" (Factory setting: "Auto-tuning")

When set to "Auto Tuning", vibration is automatically detected during Advanced auto-tuning, and Adjust Anti-resonance Control is automatically adjusted.

Table 6-26 Parameters aboyt Adjust Anti-resonance Control

Parameter		Contents	When enabled	Classification
Pn160	n.□□0□	Auto tuning of Adjust Anti-resonance Control without auxiliary functions	Immediately	Tuning
	n.□□1□ (Factory setting)	Auto tuning of Adjust Anti-resonance Control with auxiliary function		

Vibration suppression function:

The vibration suppression function is mainly used to suppress the low-frequency vibration (shaking) of about 1 to 100 Hz caused by the vibration of the machine during positioning.

Normally, please set to "Auto-tuning" (Factory setting: "Auto-tuning").

When set to "Auto-tuning", vibration is automatically detected during advanced auto-tuning, and vibration suppression control is automatically adjusted.

Set to "No auto-tuning" only when you do not change the vibration suppression control setting that was set before executing advanced auto tuning.

Table 6-27 Parameters about Vibration suppression function

Parameter		Contents	When enabled	Classification
Pn140	n.□0□□	Auto tuning of Vibration suppression function without auxiliary functions	Immediately	Tuning
	n. □1□□ (Factory setting)	Auto tuning of Vibration suppression function with auxiliary function		

Friction compensation function:

- Lubricant viscous resistance changes in machine sliding parts
- Frictional resistance change caused by mechanical assembly deviations
- Frictional resistance change due to Aging

The applicable conditions for friction compensation differ depending on the mode . "Mode= 1" follows the setting of "Friction compensation function selection (Pn408.3)". "Mode = 2" or "Mode = 3" has nothing to do with the setting of " Friction compensation function selection (Pn408.3)", and can be adjusted through "Valid friction compensation function ".

Table 6-28 Parameters for Friction compensation function

Mode / Friction compensation function selection		"Mode = 1"	"Mode = 2"	"Mode = 3"
Pn408	n.0□□□ (Factory setting)	Adjust when friction compensation is invalid	Adjust when friction compensation is valid	Adjust when friction compensation is valid
	n.1□□□	Adjust when friction compensation is valid		

Feedforward function:

After adjustment by "Mode= 2" and "Mode = 3" in the factory setting mode, "Feedforward (Pn109)", "Speed feedforward (V-REF) input" and "Torque feedforward (T- REF) input" will become invalid.

According to the system configuration, if you want to use the "Speed feedforward (V-REF) input" and "Torque feedforward (T-REF) input" and Model tracking control from the upper device at the same time, please set Pn140.3 = 1.

Table 6-29 Parameters for Feedforward function

Parameter		Contents	When enabled	Classification
Pn140	n.0□□□ (Factory setting)	Do not use Model tracking control and Speed/torque feedforward simultaneously	Immediately	Tuning
	n.1□□□	Using Model tracking control and Speed/torque feedforward simultaneously		

Note: When using the model tracking control under this function, the model tracking control will have the best feedforward inside the servo. Therefore, usually do not use "speed feedforward (V-REF) input" and "torque feedforward (T-REF) input" from the upper device at the same time. However, Model tracking control and "Speed feedforward (V-REF) input" and "Torque feedforward (T-REF) input" can be used at the same time as required. In this case , if the input feed-forward is not correct, it may cause overshoot, please pay attention.

6.6.2 Related Parameters

Related parameters are listed in Table 6-30 below .

•Parameters related to this function

The parameters used or referenced when executing this function.

•Whether to change the setting value of the parameter when executing this function.

"No": When executing this function, parameters cannot be changed through HCServoWorks, etc.

"Yes": Parameters can be changed through HCServoWorks, etc. when executing this function.

•Whether there is automatic setting of parameters after executing this function

"Yes": After executing this function, the parameter setting value will be automatically set or adjusted.

"No": After executing this function, the parameter setting value will not be automatically set or adjusted.

Table 6-30 Parameters related to One-parameter tuning

Parameter	Name	Is it possible to change the setting value	Automatic setting
Pn100	Speed Loop Gain	No	Yes
Pn101	Speed Loop Integral Time Constant	No	Yes
Pn102	Position Loop Gain	No	Yes
Pn103	Moment of Inertia Ratio	No	No
Pn121	Friction Compensation Gain	No	Yes
Pn123	Friction Compensation Coefficient	No	Yes
Pn124	Friction Compensation Frequency Correction	No	No
Pn125	Friction Compensation Gain Correction	No	Yes
Pn401	1st Stage 1st Torque Command Filter Time Constant	No	Yes
Pn408	Torque-Related Function Selections	Yes	Yes
Pn409	1st Stage Notch Filter Frequency	No	Yes
Pn40A	1st Stage Notch Filter Q Value	No	Yes
Pn40C	2nd Stage Notch Filter Frequency	No	Yes
Pn40D	2nd Stage Notch Filter Q Value	No	Yes
Pn140	Model Following Control-Related Selections	Yes	Yes
Pn141	Model Following Control Gain	No	Yes

Pn142	Model Following Control Gain Correction	No	Yes
Pn143	Model Following Control Bias in the Forward Direction	No	Yes
Pn144	Model Following Control Bias in the Reverse Direction	No	Yes
Pn145	Vibration Suppression 1 Frequency A	No	Yes
Pn146	Vibration Suppression 1 Frequency B	No	Yes
Pn147	odel Following Control Speed Feedforward Compensation	No	Yes
Pn160	Anti-Resonance Control-Related Selections	Yes	Yes
Pn161	Anti-Resonance Frequency	No	Yes
Pn163	Anti-Resonance Damping Gain	No	Yes

6.7 Adjust Anti-resonance Control Function

This section describes the Adjust Anti-resonance Control function.

6.7.1 About Adjust Anti-resonance Control Function

Adjust Anti-resonance Control function is used to further improve the effect of vibration suppression after the One-parameter tuning.

Adjust Anti-resonance Control function can effectively suppress the continuous vibration of about 100-1000Hz that occurs when the control gain is increased.

This function will be automatically set by Advanced Auto-tuning or Advanced Auto-tuning 2. So use this function only when further fine-tuning is required and when re-adjustment is required due to vibration detection failure.

After executing this function, if want to improve the response, perform One-parameter tuning, etc. Vibration may reoccur after the anti-vibration gain is increased by one-parameter tuning, etc. At this time, please execute this function again to make minor adjustments.

Note: •After executing this function, relevant parameters will be set automatically. Therefore, when this function is executed, the response may change greatly. For the sake of safety, please execute this function in the state of emergency stop at any time.

• Before executing the Adjust Anti-resonance Control function, please correctly set the moment of inertia ratio (Pn103) through advanced auto-tuning, etc. Otherwise, vibration may occur. .

• The vibration frequency range that can be detected by this function is 100Hz to 1,000Hz. Vibration outside the detection range cannot be detected, and "F----" is displayed. In this case, set the notch filter automatically with "Mode = 2" of one-parameter tuning, or use the vibration suppression function.

• Increasing the A-type anti-vibration damping gain (Pn163) can improve the vibration suppression effect, but if the damping gain is too large, the vibration may be increased instead. While checking the vibration suppression effect, gradually increase the damping gain setting value in units of 10% within the range of 0% to 200%. If the vibration suppression effect cannot be obtained even after the damping gain reaches 200%, please stop the setting and reduce the control gain through One-parameter tuning, etc.

Confirmation items before execution:

Before executing Adjust Anti-resonance Control , be sure to confirm the following settings. When the following items are not set, "NO_OP" will display:

- Select Tuning-less function to be invalid (Pn170.0 = 0) .
- The test without a motor function must be disabled (Pn00C.0 = 0).
- Torque control is not allowed.
- Write Prohibition should be disabled(Fn010) .

6.7.2 Operation Steps of Anti-resonance Control Function

Execute this function when vibration occurs after inputting an action command

Adjust Anti-resonance Control function can be done through HCServoWorks. This function cannot be operated through the operation panel.

Operation steps of Adjust Anti-resonance Control function are as follows.

- When using the Adjust Anti-resonance Control function for the first time.
- When the vibration frequency is unknown.
- When the vibration frequency is known.
- When making further fine-tuning after using the Adjust Anti-resonance Control function .

6.7.3 Related Parameters

Related parameters are shown in Table 6-31 below .

• Parameters related to the function.

The parameters used or referenced when executing this function.

• Whether to change the setting value of the parameter when executing this function.

"No": When executing this function, parameters cannot be changed through HCServoWorks, etc.

"Yes": When executing this function, parameters can be changed through HCServoWorks, etc..

• Whether there is automatic setting of parameters after executing this function.

"Yes": After executing this function, the parameter setting value will be automatically set or adjusted.

"No": After executing this function, the parameter setting value will not be automatically set or adjusted.

Table 6-31 Parameters for Anti-Resonance control function

Parameter	Name	Is it possible to change the setting value	Automatic setting
Pn160	Anti-Resonance Control-Related Selections	Yes	Yes
Pn161	Anti-Resonance Frequency	No	Yes
Pn162	Anti-Resonance Gain Correction	Yes	No
Pn163	Anti-Resonance Damping Gain	No	Yes
Pn164	Anti-Resonance Filter Time Constant 1 Correction	Yes	No
Pn165	Anti-Resonance Filter Time Constant 2 Correction	Yes	No

6.8 Vibration Suppression Function

This section explains the vibration suppression function.

6.8.1 About the Vibration Suppression Function

The vibration suppression function is mainly used to suppress the low-frequency vibration (shaking) of about 1-100 Hz caused by the vibration of the machine during positioning.

This function will be automatically set by Advanced Auto-tuning 1 or Advanced Auto-tuning 2. Only use this function when further fine-tuning and re-adjustment is required due to vibration detection failure.

After executing this function, please perform One-parameter tuning to improve the response.

Note:• After executing this function, related parameters will be set automatically. But the response may change greatly. For safety, please execute this function in a state where an emergency stop is possible at any time.

• Before executing this function, correctly set the Moment of Inertia Ratio (Pn103) by advanced auto tuning, etc. Otherwise, vibration may occur..

•The vibration frequency range that can be detected by using this function is 1~100Hz. Vibration outside the detection range cannot be detected, and "F-----" is displayed.

•Vibration cannot be detected if there is no vibration due to positional deviation, or if the vibration frequency is outside the detection frequency range. In this case, please use a displacement meter or a vibration meter to measure the vibration.

•When the vibration cannot be eliminated with the automatically detected vibration frequency, there may be an error between the actual vibration frequency and the detected frequency, please fine-tune the vibration frequency.

1) Confirmation items before execution

Before executing the vibration suppression function , be sure to confirm the following settings. When the following items are not set, "NO_OP" will display : .

- •In position control.
- • Set the Tuning-less function to be invalid (Pn170.0 = 0) .
- • The test without a motor function must be disabled (Pn00C.0 = 0).
- • Write Prohibition should be disabled(Fn010) .

2) Items affecting performance

Sufficient vibration suppression effect cannot be obtained by the vibration suppression function for vibrations that continue to occur during a stop. In this case, adjust with the Adjust Anti-resonance Control function or One-parameter tuning.

3) About the detection of vibration frequency

Frequency detection may not be possible if vibration does not appear in the position deviation or the vibration that results from the position deviation is too small. You can adjust the detection sensitivity by changing the setting of the residual vibration detection width (Pn560), which is set as a percentage of the positioning completed width (Pn522). Perform the detection of vibration frequencies again after adjusting the setting of Pn560.

Table 6-32 Parameter settings for Vibration frequency detection

	Residual Vibration Detection Width Speed Position Torque			When enabled	Classification
Pn560	Setting range	Unit	Factory setting	Immediately	Setup
	0-3000	0.1%	400		

Note: As a guideline, change the setting 10% at a time. If the setting of this parameter is lowered, the detection sensitivity will be increased. Vibration may not be detected accurately if the setting is too small. The vibration frequencies that are automatically detected may vary somewhat with each positioning operation. Perform positioning several times and make adjustments while checking the effect of vibration suppression.

6.8.2 Precautions for Vibration Suppression Function

The operation procedure of the vibration suppression function is as follows.

The operation of the vibration suppression function can be performed through HCServoWorks. This function cannot be operated through the operation panel.

Suppliments for the vibration suppression function:

Feedforward function:

In the factory setting mode, "Feedforward (Pn109)", "Speed feedforward input (V-REF) " and "Torque feedforward (T-REF) input" will become invalid.

According to the system configuration, if you want to use the "Speed feedforward input (V-REF)" and "Torque feedforward input(T-REF) " from the upper device and model tracking control at the same time, please set Pn140.3 = 1.

Table 6-33 Parameters for Feedforward Function

Parameter		Contents	When enabled	Classification
Pn140	n.0 □□□ (Factory setting)	Do not use Model tracking control and Speed/torque feedforward simultaneously	Immediately	Tuning
	n. 1 □□□	Using Model tracking control and Speed/torque feedforward simultaneously		

Note: When using the Model following control under this function, the best feedforward will be set inside the servo.

Therefore, generally do not use the "Speed feedforward (V-REF) input" and "Torque feedforward (T-REF) input" from the host device at the

same time.

However, Model following control and "Speed feedforward (V-REF) input" and "Torque feedforward (T-REF) input" can be used at the same time as required.

At this time, if the input feedforward is incorrect, it may cause overshoot.

6.8.3 Related Parameters

Related parameters are shown in Table 6-34 below .

•Parameters related to this function

The parameters used or referenced when executing this function.

• Is it possible to change the setting value of the parameter when executing this function?

"No": When executing this function, parameters cannot be changed through HCServoWorks, etc.

"Yes": Parameters can be changed through HCServoWorks, etc. when executing this function.

• Whether there is automatic setting of parameters after executing this function

"Yes": After executing this function, the parameter setting value will be automatically set or adjusted.

"No": After executing this function, the parameter setting value will not be automatically set or adjusted.

Table 6-34 Parameters for Vibration Suppression Function

Parameter	Name	Is it possible to change the setting value	Automatic setting
Pn140	Model Following Control-Related Selections	Yes	Yes
Pn141	Model Following Control Gain	No	Yes
Pn142	Model Following Control Gain Correction	No	No
Pn143	Model Following Control Bias in the Forward Direction	No	No
Pn144	Model Following Control Bias in the Reverse Direction	No	No
Pn145	Vibration Suppression 1 Frequency A	No	Yes
Pn146	Vibration Suppression 1 Frequency B	No	Yes
Pn147	Model Following Control Speed Feedforward Compensation	No	No
Pn14A	Vibration Suppression 2 Frequency	No	No
Pn14B	Vibration Suppression 2 Correction	No	No

6.9 Adjustment Application Function

The following describes the functions for further individual adjustments after advanced auto-tuning 1, advanced auto-tuning 2, and One-parameter tuning.

- •Gain switching.
- • Friction compensation function.
- • Current control mode selection.
- • Current gain value setting.
- • Speed detection method selection.

6.9.1 Gain Switching

The gain switching function includes "Manual gain switching" that uses an external input signal and "Auto gain switching".

By using the gain switching function, the gain can be increased during positioning to shorten the positioning time, and the gain can be decreased to suppress vibration when the servo motor is stopped.

Table 6-35 Parameters for Gain Switching

Parameter		Contents	When enabled	Classification
Pn139	n. □□□0 (Factory setting)	Manual gain switching	Immediately	Tuning
	n .□□□ 2	Auto gain switching		

Note: 1. n. □□□1 is a reserved parameter (Do not set) .

2. For gain switching combinations, please refer to "1) Gain switching combinations".

3. For manual gain switching, please refer to "2) Manual gain switching".

4. For the auto gain switching, please refer to "(3) Auto gain switching".

1) Gain switching combinations

Table 6-36 Gain switching combinations

Gain switching	Speed loop gain	Speed loop integral time constant	Position loop gain	Torque command filter	Model tracking control gain*	Model tracking control gain correction*	Friction compensation gain
1st gain	Speed loop gain (Pn100)	Speed loop integral time constant (Pn101)	Position loop gain (Pn102)	Filter time constant of 1st stage 1st torque command (Pn401)	Model tracking control gain (Pn141)	Model tracking control gain correction (Pn142)	Model friction compensation gain (Pn121)
2nd gain	2nd speed loop gain (Pn104)	2nd speed loop integral time constant (Pn105)	2nd position loop gain (Pn106)	Filter time constant of 1st stage 2nd torque command (Pn412)	2nd model tracking control gain (Pn148)	2nd model tracking control gain correction (Pn149)	2nd model friction compensation gain (Pn122)

*The gain switching of model tracking control gain and model tracking control gain correction is only applicable to "Manual switching gain".

In addition, the gain is switched only when the following conditions are satisfied at the same time and the gain switching signal is input. When the conditions are not met, even if other parameters in the above table are switched, these parameters will not be switched.

- No command
- The servo motor stops

2) Manual gain switching

" Manual gain switching " switches the 1st gain and the 2nd gain through the external input signal (/G-SEL).

Table 6-37 Parameters for Manual gain switching

Parameter		Contents	When enabled	Classification
Pn139	n. □□□0 (Factory setting)	Manual gain switching by external input signal (/G-SEL)	Immediately	Tuning

Table 6-38 Manual gain switching

Type	Signal name	Connector pin	Setting	Content
Input	/G-SEL	Need to be allocated	OFF	Switch to 1st gain.
			ON	Switch to 2nd gain.

3) Auto gain switching

"Auto gain switching " is only valid at position control. The switching conditions are executed with the following settings.

Table 6-39 Parameters for Auto gain switching

Parameter		Switch condition	Switching gain	Waiting time	Switching time
Pn139	n.□□□2	Condition A satisfied	1st gain 2nd gain	Waiting time 1 Pn135	Switching time 1 Pn131
		Condition A not satisfied	2nd gain 1st gain	Waiting time 2 Pn136	Switching time 2 Pn132

Select "Switching condition A" for auto gain switching from the following settings.

Table 6-40 "Switching condition A" parameters of auto gain switching

Parameter		Position control Switching condition A	Other than position control (no switching)	When enabled	Classification
Pn139	n.□□0□ (factory setting)	Positioning completion signal (/COIN) ON	Fixed at 1st gain	Immediately	Tuning
	n.□□1□	Positioning completion signal (/COIN) OFF	Fixed at 2nd gain		
	n.□□2□	Positioning proximity signal (/NEAR) ON	Fixed at 1st gain		
	n.□□3□	Positioning proximity signal (/NEAR) OFF	Fixed at 2nd gain		
	n.□□4□	Position command filter output = 0 And the command pulse input is OFF	Fixed at 1st gain		
	n.□□5□	Position command pulse input ON	Fixed at 2nd gain		

*Auto switching mode 1 (Pn139.0=2)

Relationship between waiting time and switching time at gain switching

For example, assume where the position loop gain Pn102 is switched to the 2nd position loop gain Pn106 in the auto gain switching mode conditional on the positioning completion signal (/COIN) ON. The /COIN signal of the switching condition is ON, and the gain is linearly changed from Pn102 to Pn106 during the switching time Pn131 after waiting for the waiting time Pn135 from the time when the switching condition is satisfied.

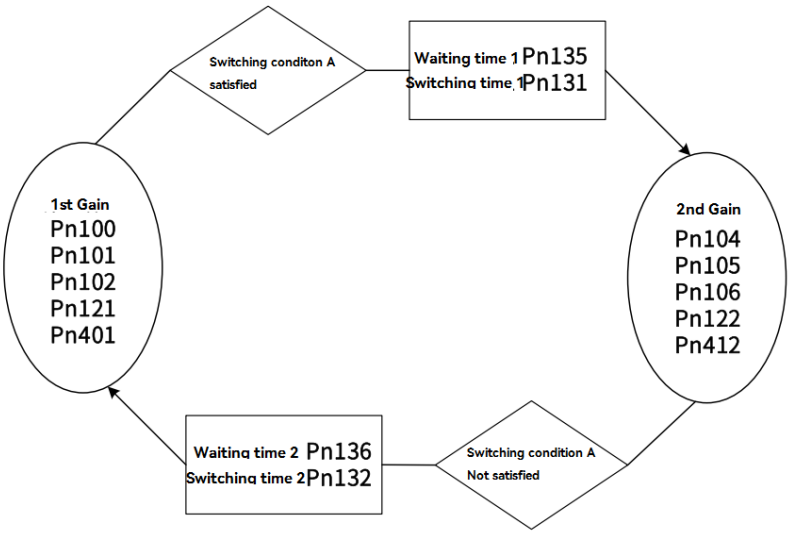

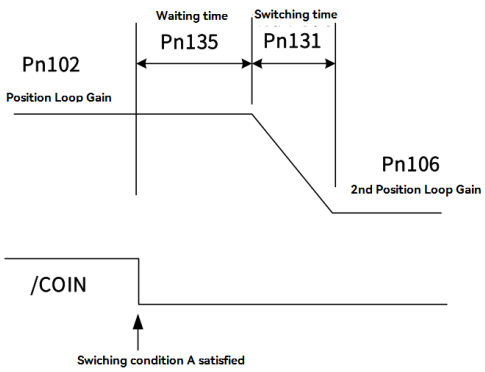

Figure 6-5 Relationship between waiting time and switching time at gain switchin

Note: Gain switching can be executed under PI or IP control mode (Pn10B) .

4) Related parameters

Table 6-41 Parameters for adjustment application function

Parameter	Name	When enabled	Classification
Pn100	Speed Loop Gain	Immediately	Tuning
Pn101	Speed Loop Integral Time Constant		
Pn102	Position Loop Gain		
Pn401	1st Stage 1st Torque Command Filter Time Constant		
Pn141	Model Following Control Gain		
Pn142	Model Following Control Gain Correction		
Pn121	Friction Compensation Gain		
Pn104	2nd Speed Loop Gain		
Pn105	2nd Speed Loop Integral Time Constant		
Pn106	2nd Position Loop Gain		
Pn412	1st Stage 2nd Torque Command Filter Time Constant		
Pn148	2nd Model Following Control Gain		
Pn149	2nd Model Following Control Gain Correction		
Pn122	2nd Friction Compensation Gain		

5) Related parameters for auto gain switching

Table 6-42 Parameters related to auto gain switching

Parameter	Name	When enabled	Classification
Pn131	Gain Switching Time 1	Immediately	Tuning
Pn132	Gain Switching Time 2		
Pn135	Gain Switching Waiting Time 1		
Pn136	Gain Switching Waiting Time 2		

6) Related monitoring

Table 6-43 Monitoring No.related to auto gain switching

Monitoring No.	Monitoring name	Display value	Content
Un014	Active Gain Monitor	1	Displayed when the 1st gain is valid
		2	Displayed when the 2nd gain is valid

Note: "1" is displayed when the Tuning-less function is valid .

Table 6-44 Monitoring parameters related to auto gain switching

Parameter	Analog monitoring	Monitoring name	Output value	Content
Pn006 Pn007	n. □□ 0B	Inactiuve Gain Monitor	1V	The 1st gain is valid
			2V	The 2nd gain is valid

6.9.2 Manual Adjustment of Friction Compensation

The Friction compensation function is to correct viscous friction fluctuations and fixed load fluctuations.

The Friction compensation function can be automatically adjusted through advanced auto-tuning 1, advanced auto-tuning 2, and One-parameter tuning. The following describes the procedure when manual adjustment is required.

1) Parameters to be set

To use the Friction compensation function, the following parameters need to be set.

Table 6-45 Parameters for Friction compensation function

Parameter		Content	When enabled	Classification
Pn408	n.0□□□ (Factory setting)	Without friction compensation function	Immediately	Setup
	n.1□□□	Use friction compensation function		

Table 6-46 Parameters for Friction compensation function

Parameter	Name	When enabled	Classification
Pn121	Friction Compensation Gain	Immediately	Tuning
Pn123	Friction Compensation Coefficient		
Pn124	Friction Compensation Frequency Correction		
Pn125	Friction Compensation Gain Correction		

2) Operation steps of Friction compensation function

The operation steps of the friction compensation function are as follows.

Note: When using the friction compensation function, please set the Moment of Inertia Ratio (Pn103) as correctly as possible . If the moment of inertia ratio is incorrect, it may cause vibration.

① Restore the following parameters related to friction compensation to the factory settings.

Friction Compensation Gain (Pn121) → Factory setting: 100

Friction Compensation Coefficient (Pn123) → Factory setting: 0

Friction Compensation Frequency Correction (Pn124) → Factory setting: 0

Friction Compensation Gain Correction (Pn125) → Factory setting: 100

Note: Please make the Friction Compensation Frequency Correction n (Pn124) and Friction Compensation Gain Correction (Pn125) always be the factory settings.

② To confirm the effect of the friction compensation function, please increase the Friction Compensation Coefficient (Pn123) gradually.

Note: Normally, please set the setting value of the Friction Compensation Coefficient (Pn123) below 95%. If the effect is not obvious enough, please increase the setting value of the Friction Compensation Gain (Pn121) by 10% within the range of no vibration

The effect of adjusting parameters:

Pn121: Friction Compensation Gain

Set parameters of response to external disturbances. The higher the setting value, the better the response to external disturbance, but if the setting value is too high, vibration may occur when the device has a resonance frequency.

Pn123: Friction Compensation Coefficient

Sets the parameters for the friction compensation effect. The higher the setting value, the better the effect, but if the setting value is too high, the response is more likely to vibrate. Generally, please set the setting value below 95%.

③ Adjustment effect: The adjustment result is shown as follows in the form of waveform diagrams before and after adjustment.

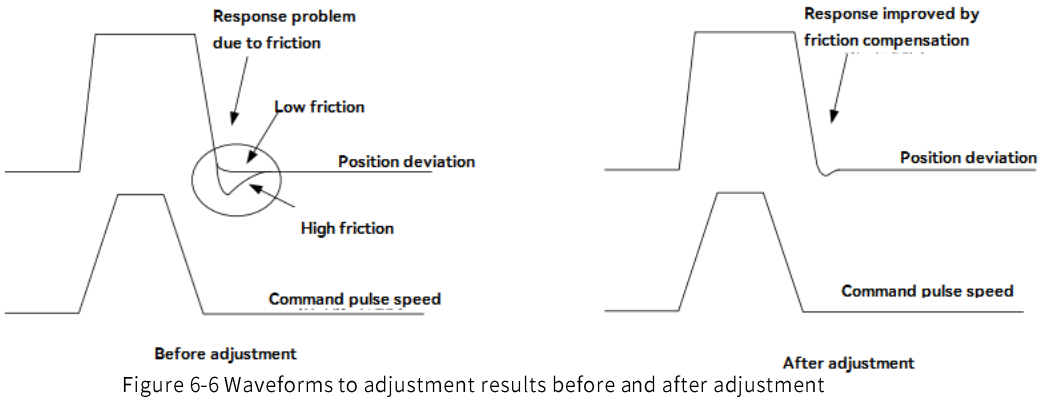

Figure 6-6 Waveforms to adjustment results before and after adjustment

6.9.3 Current Control Mode Selection Function

The current control mode selection function can reduce the high-frequency noise during the servo motor stop. The models can use this function are as follows. This function is valid in the factory setting mode, and is set as a valid condition in many occasions. When using this function, please set Pn009.1 = 1.

Table 6-47 Parameters for current control mode selection function

Parameter		Content	When enabled	Classification
Pn009	n. □□0□	Select Current control mode 1	Restart the power supply	Tuning
	n. □□1□ (Factory setting)	Select Current control mode 2 (low noise)		

6.9.4 Current Gain Value Setting Function

The current gain value setting function is to adjust the current control parameters inside the servo drive according to the speed loop gain (Pn100) to reduce noise. By reducing the current gain value (when Pn13D is 2 000 , the current gain is the internal setting value), the noise level can be reduced. But at the same time, it will cause the response characteristics of the servo drive. Therefore, please adjust within the range that can ensure the response characteristics. In addition, it is invalid during torque control (Pn000.1 = 2).

POINTS

Selecting power supply control mode 2 may increase the load rate which is in stop.

Table 6-48 Parameters for Current gain value setting function

Pn13D	Current Gain Value	Speed Position Torque		When enabled	Classification
	Setting range	Unit	Factory setting	Immediately	Tuning
	100 ~ 2000	1%	2000		

Note: After changing this function, the response characteristics of the speed loop will also change, so it is necessary to re-adjust the servo.

6.9.5 Speed Detection Method Selection

The speed detection method selection can smooth the servo motor speed during operation. Please set Pn009.2 = 1 and select Speed detection 2 to make the motor speed smooth.

Table 6-49 Parameters for Speed detection method selection

Parameter		Content	When enabled	Classification
Pn009	n. □0□□ (Factory setting)	Select Speed detection 1	Restart the power supply	Tuning
	n. □1□□	Select Speed detection 2		

Note: After changing the speed detection method, the response characteristics of the speed loop will also change, so it is necessary to re-adjust the servo.

6.10 Other Adjustments Functions

6.10.1 Feedforward

Feedforward is the function of performing feedforward compensation to shorten the positioning time during Position control.

Table 6-50 Parameters for Feedforward

	Feedforward	Position		When enabled	Classification
Pn109	Setting range	Unit	Factory setting	Immediately	Tuning
	0 ~ 100	1%	0		
	Feedforward Filter Time Constant	Position		When enabled	Classification
Pn10A	Setting range	Unit	Factory setting	Immediately	Tuning
	0-6400	0.01ms	0		

Note: If the feed-forward setting value is too large, it may cause mechanical vibration. Please lower the setting value to 80% or less.

6.10.2 P (Proportional) control

Select the P control from the upper device through the input signal (/P-CON).

However, when it is set to Speed control with zero-position fix function, it is usually not necessary to use this function for a position loop. When the /P-CON signal is turned ON, it becomes P control.

P control is set through Pn000.1 and input signal (/P-CON).

1) /P-CON input signal

Use /P-CON for switching signal of PI control/P control.

Table 6-51 /P-CON input signal

Type	Name	Connection terminal	State	Content
Input	/P-CON	CN1-41 (Factory setting)	OFF (H level)	Change to PI control (Proportional/integral control)
			ON (L level)	Change to P control (Proportional control)

2) Control mode and input signal of P control

When the control mode is speed control or position control, it can be switched to P control.

Table 6-52 Control mode parameters

Parameter		Name	Switch to P control
Pn000 (Function selection application switch 0)	n.□□0□	Speed control	Can be switched by factory setting. (CN1-41 = /PCON) /P-CON can be assigned to other terminals as required
	n.□□1□	Position control	

	n.□□2□	Torque control	Cannot be switched
	n.□□3□	Internal speed control	Be sure to assign /P-CON to any one of CN1-40~46 terminals
	n.□□4□	Internal speed control - speed control	
	n.□□5□	Internal speed control-position control	
	n.□□6□	Internal speed control-torque control	
	n.□□7□	Position control-speed control	
	n.□□8□	Position control-torque control	
	n.□□9□	Torque control-speed control	
	n.□□A□	Speed control - speed control with zero-position fix	
	n.□□B□	Position control - position control with command pulse prohibition function	

6.10.3 Setting Mode Switch (P control/PI control switching)

The Mode switch is a function to automatically switch between P control and PI control.

Set switching conditions through Pn10B.0, and P control starts when the setting values of Pn10C, Pn10D, Pn10E, and Pn10F are exceeded.

If switching conditions and condition values are set, overshoot can be suppressed during acceleration and deceleration and the settling time can be shortened.

1) Related parameters

Select the switching condition of the Mode switching through Pn10B.0.

Table 6-53 Parameters for Setting mode switching

Parameter		Select mode switch	Parameters that set conditional values	When enabled	Classification
Pn10B	n. □□□ 0 (Factory setting 0)	Conditional on internal torque command	Pn10C	Immediately	Setup
	n. □□□ 1	Conditional on speed command	Pn10D		
	n. □□□ 02	conditional on acceleration	Pn10E		
	n. □□□ 03	Conditional on positional deviation	Pn10F		
	n. □□□ 04	Mode switching not selected	-		

Table 6-54 Parameters for setting switching condition

Parameter	Name	When enabled	Classification
Pn10C	Mode Switching Level for Torque Command	Immediately	Tuning
Pn10D	Mode Switching Level for Speed Command		
Pn10E	Mode Switching Level for Acceleration		
Pn10F	Mode Switching Level for Position Deviation		

Example: When the switching condition of the mode switching is used as the torque command (factory setting)

When the torque command exceeds the torque set in Pn10C, the speed loop will switch to P control.

The torque command value is set to 200% at the factory.

No mode selection	With mode selection
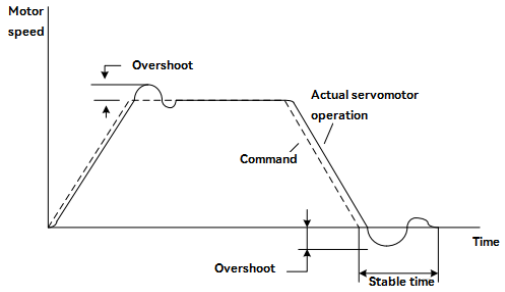	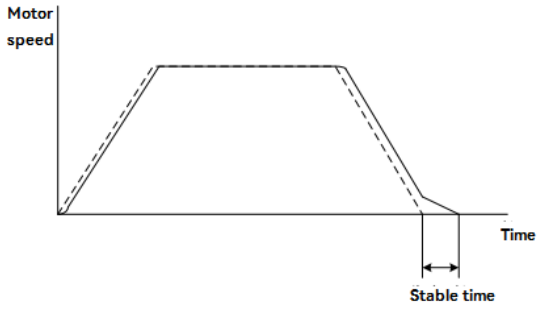

6.10.4 Torque Command Filter

A delay filter and a notch filter are serially configured in the torque command, and they act independently.

The notch filter is enabled/disabled through Pn408.

1) Torque command filter

If the vibration of the machine may be caused by the servo drive, if the following torque command filter time parameters are adjusted, the vibration may be eliminated. The smaller the value, the better the response, but it is limited by the mechanical conditions.

Table 6-55 Parameters for Torque command filter

	1st Stage 1st Torque Command Filter Time Constant Speed Position Torque			When enabled	Classification
Pn401	Setting range	Unit	Factory setting	Immediately	Tuning
	0 ~ 65535	0.01ms	100		

Setting standard of Torque command filter

- Speed Loop Gain (Pn100[Hz]) and torque filter time constant (Pn401[ms])
- Adjustment value of stable control range Pn401[ms] ≤1000/（2πPn100[Hz] 4）
- Limit adjustment value Pn401[ms]＜1000/（2π Pn100[Hz] 1）

Table 6-56 Parameters for Filter frequency of the 2nd stage 2nd torque command

	2nd Stage 2nd Torque Command Filter Frequency Speed Position Torque			When enabled	Classification
Pn40F	Setting range	Unit	Factory setting	Immediately	Tuning
	100 ~ 5000	1Hz _	5000		

Table 6-57 Parameters for 2nd stage 2nd torque command filter Q value

	2nd Stage 2ond Torque Command Filter Q Value Speed Position Torque			When enabled	Classification
Pn410	Setting range	Unit	Factory setting	Immediately	Tuning
	50 ~ 100	0.01ms	50		

➢ Note: When set to 5000, the filter becomes invalid.

2) Notch filter

The notch filter is a filter used to eliminate specific vibration frequency components caused by resonance of the ball screw shaft, etc.

The gain curve is shown in the figure below, and a specific frequency (hereinafter referred to as the notch frequency)

is in the shape of a notch, which can reduce or eliminate the notch frequency.

The larger the value of the Q value of the notch filter, the more severe the notch and phase delay.

Note: Select the notch filter to be valid/invalid through Pn408.

Table 6-58 Parameters for the validity/invalidity of notch filters

Parameter		Content	When enabled	Classification
Pn408	n.□□□0 [Factory setting]	Disable the 1st stage notch filter	Immediately	Setup
	n. □□□ 1	Enable the 1st stage notch filter		
	n. □ 0 □□ [Factory setting]	Disable the 2nd stage notch filter		
	n. □ 1 □□	Enable the 2nd stage notch filter		

Table 6-59 Notch filter parameters by mechanical vibration frequency

Parameter	Content	When enabled	Classification
Pn409	1st Stage Notch Filter Frequency	Immediately	Tuning
Pn40A	1st Stage Notch Filter Q Value		
Pn40B	1st Stage Notch Filter Depth		
Pn40C	2nd Stage Notch Filter Frequency		
Pn40D	2nd Stage Notch Filter Q Value		
Pn40E	2nd Stage Notch Filter Depth		

Note: 1. Do not set the Notch Filter Frequency (Pn409 or Pn40C) close to the response frequency of the speed loop. At least this frequency should be set as 4 times of the speed loop gain (Pn100) (but Pn103 should be set correctly). Incorrect setting may cause mechanical damage due to vibration.

2. Be sure to change the Notch Filter Frequency (Pn409 or Pn40C) when the servo motor stop. If making changes while the servo motor isrunning, it may cause vibration.

Q value = 0.7	Q value = 1.0
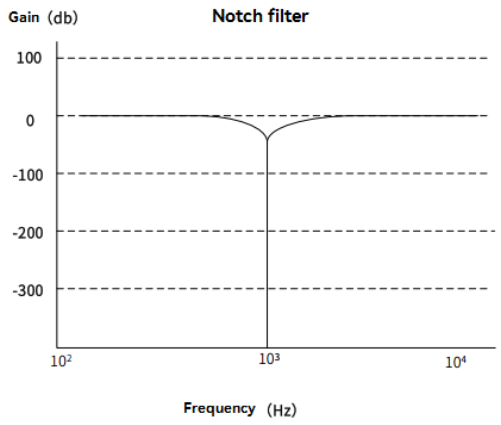	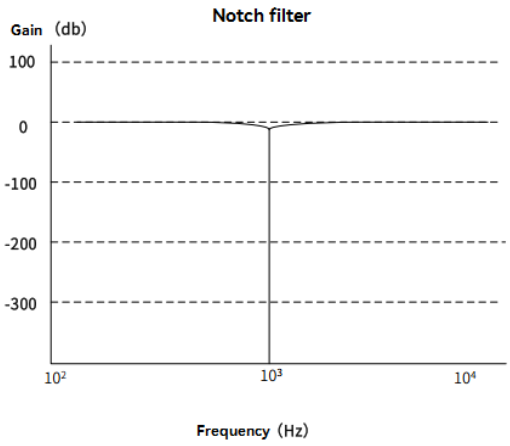

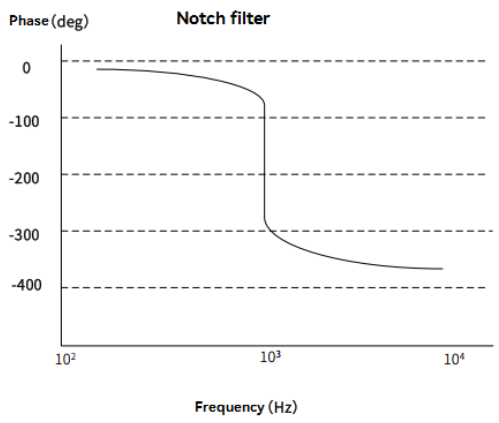
Phase (deg)
Notch filter
0
-100
-200
-300
-400
10²
10³
10⁴
Frequency (Hz)

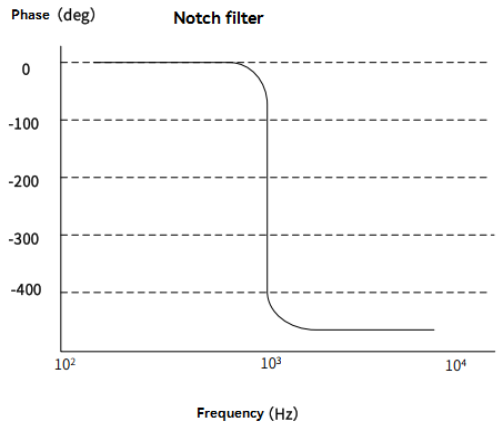
Phase (deg)
Notch filter
0
-100
-200
-300
-400
10²
10³
10⁴
Frequency (Hz)

Chapter 7 Auxiliary Function

Chapter 7 Auxiliary Function.....187
7.1 Auxiliary Function List.....188
7.2 Display of Alarm Record (Fn000) 188
7.3 JOG (Fn002) 189
7.4 Origin Search (Fn003) 190
7.5 JOG Program (Fn004) 190
7.6 Initialize Parameters (Fn005).....192
The parameter setting initialization operation steps are as follows:.....192
7.7 Clear Alarm History (Fn006) 192
7.8 Adjust Analog Monitor Output Offset (Fn00C) 192
7.9 Adjust Analog Monitor Output Gain (Fn00D).....193
7.10 Auto Tuning Motor Current Detection Signal Offset (Fn00E) 194
7.11 Manually adjust Motor Current Detection Signal Offset (Fn00F) 196
7.12 Writing Prohibition Setting (Fn010) 196
7.13 Display Servo Motor Model (Fn011) 197
7.14 Display Software Version (Fn012) 197
7.15 Initialize Vibration Detection Level(Fn01B).....198
7.16 Software Reset (Fn030) 199

7.1 Auxiliary Function List

Auxiliary functions refer to functions related to the operation and adjustment of the servo motor.

Displayed as a number starting with Fn on the operation panel.

The following table lists the overview and reference items of auxiliary functions.

Table 7-1 List of auxiliary functions

Fn number	Function	Operation of the operation panel	By HCServoWorks	Reference Chapter
Fn000	Display Alarm History	1	1	7.2
Fn002	JOG	1	1	7.3
Fn003	Origin Search	1	1	7.4
Fn004	Jog Program	1	1	7.5
Fn005	Initialize Parameters	1	1	7. 6
Fn006	Clear Alarm History	1	1	7. 7
Fn008	Reset Absolute Encoder	1	1	—
Fn009	Autotune Analog (Speed/Torque) Command Offset	1	1	—
Fn00A	Manually Adjust Speed Command Offset	1	1	—
Fn00B	Manually Adjust Torque Command Offset	1	1	—
Fn00C	Adjust Analog Monitor Output Offset	1	1	7. 8
Fn00D	Adjust Analog Monitor Output Gain	1	1	7. 9
Fn00E	Autotune Motor Current Detection Signal Offset	1	1	7.10
Fn00F	Manually Adjust Motor Current Detection Signal Offset	1	1	7. 11
Fn010	Write Prohibition Setting	1	0	7. 12
Fn011	Display Servomotor Model	1	1	7. 13
Fn012	Display Software Version	1	1	7. 14
Fn013	Multiturn Limit Setting after Multiturn Limit Disagreement Alarm	1	1	—
Fn01B	Initialize Vibration Detection Level	1	1	7. 15
Fn030	Software Reset	1	1	7. 16
Fn200	Tuning-less Level Setting	1	1	6.2.2
Fn201	Advanced Autotuning without Command	0	1	6.3
Fn202	Advanced Autotuning with Command	0	1	6.4
Fn203	One-Parameter Tuning	1	1	6.5
Fn204	Adjust Anti-resonance Control	0	1	6.7
Fn205	Vibration Suppression	0	1	6.8
Fn206	EasyFFT	1	1	—
Fn207	Online Vibration Monitoring	1	1	—

1 : Operable 0 : Not operable

7.2 Display of Alarm Record (Fn000)

The servo drive has a retroactive display function, which can display up to 10 alarm records that have occurred.

The number and time stamp of the alarm occurrence can be confirmed.

Time stamp is a function that measures the duration after the control power supply and main circuit power supply are turned on in units of 100ms, and displays the total operating time when an alarm occurs.

If it is operated 24 hours a day, 365 days a year, it can be continuously measured for about 13 years.

< Time stamp display example>

When displaying 36000

36000x100[ms]=3600[s]=60[min]=1[h]

So the total run time is 1 hour.

The procedure for displaying alarm records is as follows:

①Press Ⓜ key to switch to auxiliary function mode "FN000"

②Long-press Ⓢ for 1 sec., and the latest alarm will be displayed.

③After short-pressing Ⓢ , the lower 4 digits of the alarm time stamp will be displayed, and short-press Ⓢ to display the middle 4 digits of the alarm time stamp, then short-press Ⓢ once to display the highest 2 digits of the alarm time stamp. Then short-press Ⓢ again to display the alarm record currently viewed.

④Press Ⓥ key to display the previous alarm. Press Ⓐ key to display the new alarm. The higher the number in the leftmost digit, the older the alarm displayed.

⑤Press Ⓢ for about 1 sec, then return to the auxiliary function "FN000"

<Supplements>

•When the same alarm occurs continuously, if the interval between error occurrences is less than 1 hour, it will not be saved, and if it exceeds 1 hour, the alarm will be saved.

•" □._ _ _ " is displayed on the operation panel.

⚠ CAUTION

·The overtravel prevention function is invalid during JOG operation. While operating, the operating range of the machinery used must be considered.

•Alarm records can only be deleted through " Clear Alarm History (Fn006)". Even if the alarm is reset or the main circuit power of the servo drive is cut off, the alarm history cannot be deleted.

7.3 JOG (Fn002)

JOG operation refers to the function to confirm the servo motor operation through speed control without connecting to the host device.

1) Setting items before operation

To perform J OG operation, make the following settings in advance.

•When the S- O N input signal is ON , please switch it to OFF .

•Pn50A.1 is set to "7" (always-ON " Valid "), please change it to a value other than " 7 " .

Table 7-2 Parameters for Jog (J O G) speed

Pn 304	Jogging Speed		Speed / Position / Torque	When enabled	Classification
	Setting range	Unit	Factory setting	Immediately	Setup
	0～10000	1 min^{-1}	500		

• Please set the JOG operation speed after considering the operation range of the machine used. JOG running speed is set by Pn304.

2) Operation steps

The following describes the operation steps when the servo motor rotation direction is set to Pn000.0=0 (CCW is forward-rotation). Acceleration and deceleration in the process of FN002 is subject to Pn 305 and Pn 306. For the usage of these two parameters, please refer to " Section 5.4.4 Soft Starting".

JOG operation are as follows:

①Press Ⓜ key to switch to Auxiliary function "Fn000"

②Press Ⓐ or Ⓥ to display "Fn002"

③Press Ⓢ to display "-JOG"

④Press Ⓜ key to display "-JOG" to enter into servo-ON

⑤Press Ⓐ key (forward-rotation) to Ⓥ key (reversed-rotation) and the servo motor rotates at the speed set by Pn304.

⑥Press Ⓜ key to enter into the servo-OFF. You can also press Ⓢfor about 1 sec to turn off the servo.

⑦Press Ⓢ key for about 1 sec, then return to "Fn002"

7.4 Origin Search (Fn003)

Origin search is a function to determine the position of the origin pulse (phase C) of the incremental encoder and stop at that position. This function is used when the motor shaft and mechanical position need to be positioned

Origin search can be performed under the following conditions.

• S-ON is not input.

• Parameter Pn50A.1≠7.

The servo motor speed 60min $^{-1}$.

POINTS

• Please execute the origin search when the coupling is not connected.

• Forward-rotation drive prohibition (P-OT) and reverse-rotation drive prohibition (N-OT) are invalid when performing origin search。

The operation steps of origin search and positioning are as follows:

①Press Ⓜ key to switch to Auxiliary function mode "Fn000"

②Press Ⓐ or Ⓥ key to display "Fn003"

③Press Ⓢ for 1 sec, Fn003(origin search)" "-.CSR" is displayed for about 1 sec.

④Press Ⓜ key to enable the servo and then long-press Ⓐ (forward-rotation) or Ⓥ(reverse-rotation) to origin search, then search dirction changes according to the setting of Pn000.0. Then long-press Ⓐ(forward-rotation) or Ⓥ(reverse-rotation) until the servo motor stops, and the "C26" flashes on the panel, at this moment, the origin search is completed.

⑤After the origin search is completed, press Ⓜ key to disable the servo motor, and the panel displays "C26"

⑥Press Ⓢ for 1 sec and return to the auxiliary function mode "Fn003" (origin serach)

7.5 JOG Program (Fn004)

JOG program refers to the function of setting and executing the continuous operation determined by the preset operation mode, moving distance, moving speed, acceleration and deceleration time, and the number of repeated operations.

This function is the same as JOG operation (FnO02) and no need to connecte the upper device. Confirm the servo motor' s operation and have the simple positioning.

1) Setting items before operation

To perform Program JOG operation, make the following settings in advance.

•Please consider the operating range and safe operating speed of the machine, and set the correct operating distance and operating speed.

•Please make the servo drive ready.

• Switch the S-ON input signal to 0FF.

• When Pn50A.1 is set to "7" (Normally servo-ON "valid"), please change it to a value other than "7".

<Supplement>

• Position command filtering, in position control, can be performed.

•The Overtravel prevention function becomes valid.

•When using an absolute encoder, the SEN signal is always valid.

2) Related parameters

The parameters that can be set in the program JOG operation are as follows.

Table 7-3 Parameters for Program JOG operation setting

Pn 530	Program Jogging-Related Selections Speed Position Torque			When enabled	Classification
	Settiing range	Unit	Factory setting	Immediately	Setup
	-	-	0000		
Pn 531	Program Jogging Travel Distance Speed Position Torque			When enabled	Classification
	Settiing range	Unit	Factory setting	Immediately	Setup
	1~1073741824(2^{30})	1 instruction unit	32768		
Pn 533	Program Jogging Movement Speed Speed Position Torque			When enabled	Classification
	Settiing range	Unit	Factory setting	Immediately	Setup
	1～10000	1 min^{-1}	500		
Pn 534	Program Jogging Acceleration/Deceleration Time Speed Position Torque			When enabled	Classification
	Settiing range	Unit	Factory setting	Immediately	Setup
	2～10000	1ms	100		
Pn 535	Program Jogging Waiting Time Speed Position Torque			When enabled	Classification
	Settiing range	Unit	Factory setting	Immediately	Setup
	0～10000	1ms	100		
Pn 536	Program Jogging Number of Movements Speed Position Torque			When enabled	Classification
	Settiing range	Unit	Factory setting	Immediately	Setup
	0～1000	1 time	1		

Table 7-4 Pn530 parameters setting

Parameter		Contents	Factory setting
Pn 530	n.□□□0	(Waiting time Pn535→Forward Travel DistancePn531)×Number of movements Pn536	0
	n.□□□1	(Waiting time Pn535→Reverse Travel DistancePn531)×Number of movements Pn536	
	n.□□□2	(Waiting time Pn535→Forward Travel Distance Pn531)×Number of movements Pn536 (Waiting time Pn535→Reverse Travel DistancePn531)×Number of movements Pn536	
	n.□□□3	(Waiting time Pn535→Forward Travel Distance Pn531)×Number of movements Pn536 (Waiting time Pn535→Reverse Travel Distance Pn531)×Number of movements Pn536	
	n.□□□4	(Waiting time Pn535→Forward Travel Distance Pn531→Waiting time Pn535→ReverseTravel Distance Pn531)×Number of movements Pn536	
	n.□□□5	(Waiting time Pn535→Forward Travel Distance Pn531→Waiting time Pn535→Forward Travel Distance Pn531)×Number of movements Pn536	

3) How to set unlimited operation

• When Pn530.0=0/1/4/5, set the Number of movements (Pn536) to " 0 " to run infinitely.

•The program JOG operation mode follows the setting of Pn530.0. In various operating modes, only the number of movement is unlimited. Please refer to Table 8-3 and Table 8-4 for details .

4) Operation steps

The operation steps of Program JOG operation are as follows:

①Press Ⓜ key to switch to auxiliary function mode "FN000"

②Press Ⓐ or Ⓥ key to display "FN004"

③Press Ⓢ key for about 1 sec or more

④Press Ⓜ key to enter into servo-ON

⑤In accordance with the initial movement direction of the operation mode Ⓐ or Ⓥ key, it will start to act after the waiting time.

⑥If the JOG operation of program finished, "End" will flash and then return to the Step 4.

7.6 Initialize Parameters (Fn005)

POINTS

- Parameter setting value initialization must be done with the servo OFF. It cannot be executed while the servo is ON.
- Restart the power supply to make the setting effective.

The parameter setting initialization operation steps are as follows:

①Press Ⓜ key to switch to auxilairy function mode " FN000 ".

②Press Ⓐ or Ⓥ key to display " FN005 ".

③Press Ⓢ key for more than 1 second and display " PINIT ".

④Press Ⓜ key to start parameter initialization. During initialization, the display will blink.

⑤After initialization is complete, " donE " will blink for about 1 second.

⑥After displaying "donE", return to displaying " PINIT ".

⑦Press Ⓢ key, return " FN005 " is displayed.

⑧To make the setting effective, please turn on the power of the servo drive again.

7.7 Clear Alarm History (Fn006)

Function to delete all alarm records recorded in the servo drive.

Alarm records can only be deleted by this function. Even if the alarm is reset or the main circuit power supply of the servo drive is cut off, the alarm history cannot be deleted.

The operation steps to delete the alarm records are as follows:

①Press Ⓜ key to switch to auxiliary function mode " FN000 ".

②Press Ⓐ or Ⓥ key to display " FN006 ".

③Press Ⓢ key for more than 1 second , the display shows " TRCLR ".

④Press Ⓜ key to clear the alarm history. after clearing" donE " will blink for about 1 second.

⑤"donE" is displayed.

⑥Press Ⓢ key to return to " FN006 ".

7.8 Adjust Analog Monitor Output Offset (Fn00C)

Manually adjust the offset of the analog monitoring output (Torque command monitoring and Motor speed monitoring). The offset value of Torque command monitoring and Motor speed monitoring can be adjusted independently. The offset value has been adjusted at the factory, so it is generally not necessary to use this function.

1) Adjustment example

The example of offset amount adjustment for motor speed monitoring is shown below..

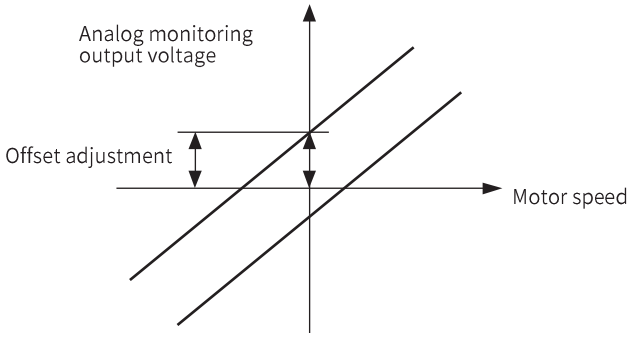

Figure 7-1 Example diagram of offset adjustment for Motor speed monitoring

Table 7-5 Offsert specification for Motor speed monitoring

Items	Specification
Zero-adjustment range	-2 V ~ +2 V
Adjustment unit	18.9 mV /L S B

<Supplement>

•This function cannot be executed when set to Write Prohibition Setting (Fn010).

•Even if the Initialize Parameters (Fn005) is executed, the adjustment value cannot be initialized.

•When adjusting the offset, connect the actual measuring instrument with the analog monitoring output at zero output and perform the adjustment. The setting example of zero output is shown below.

• When the servo motor is not powered, set the monitor signal as the torque command.

• During speed control, set the monitor signal to position deviation.

2) Operation steps

The operation steps of zero adjustment of analog monitoring output are as follows:

①Press Ⓜ key to switch to auxiliary function mode " Fn000 ".

②Press Ⓐ or Ⓥ key to display " Fn00C ".

③Press Ⓢ key for about 1 sec , displaying " Ch1_o ".

④Press Ⓜ key to switch between the monitoring output of channel 1 and channel 2, and channel 2 is displayed as " Ch2_o ".

⑤Press Ⓢ key (less than 1 sec), zero adjustment data is displayed.

⑥Press Ⓐ key or Ⓥ to change the data, and adjust the offset value of the analog monitoring output.

⑦Press Ⓢ key (less than 1 sec), to switch to display the channel of analog monitoring output.

⑧Press Ⓢ key for about 1 sec , return to " Fn00C ".

7.9 Adjust Analog Monitor Output Gain (Fn00D)

Manually adjust the gain of Analog monitoring output (Torque command monitoring and Motor speed monitoring). The gains of torque command monitoring and motor speed monitoring can be adjusted independently. The gain has been adjusted at the factory, so generally there is no need to use this function.

1) Adjustment example

The example of gain adjustment for motor speed monitoring is shown below.

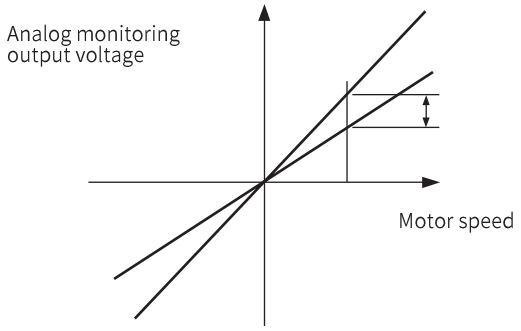

Figure 7-2 Example diagram of gain adjustment for motor speed monitoring

When setting the gain adjustment range, the 100% output value (gain adjustment value 0) can be used as the standard, and the adjustment can be made between 0.5 times and 1.5 times of the standard value.

<Example>

When setting to "-125":

$$100 + (-125 \times 0.4) = 50\ [\%]$$

Therefore, the monitor output voltage is 0.5 times.

When setting to "125":

$$100 + (125 \times 0.4) = 150\ [\%]$$

Therefore, the monitor output voltage is 1.5 times.

Table 7-6 Gain adjustment example for Motor speed monitoring

Items	Specification
Zero-adjustment range	50% ~ 150%
Adjustment unit	0.4% /L S B

<Supplement>

•This function cannot be executed when set to Write Prohibition Setting (Fn010).

•Even if the Initialize Parameters (Fn005) is executed, the adjustment value cannot be initialized.

2) Operation steps

The operation steps of zero-adjustment of analog monitoring output are as follows:

①Press Ⓜ key to switch to auxiliary function mode " Fn000 ".

②Press Ⓐ or Ⓥ key to display " Fn003 ".

③Press Ⓢ key for about 1 sec , to display " Ch1_G ".

④Press Ⓜ key to switch between the Monitoring output of channel 1 and channel 2, and channel 2 is displayed as " Ch2_G ".

⑤Press Ⓢ key (less than 1 sec), to display gain adjustment data.

⑥Press Ⓐ or Ⓥ key to change the data, to adjust the gain of the analog monitor output.

⑦Press Ⓢ key for about 1 sec , and return to" Fn003 ".

7.10 Auto Tuning Motor Current Detection Signal Offset (Fn00E)

POINTS

- The automatic adjustment of the offset value of the motor current detection signal must be operated at servo OFF.
- When the torque fluctuation is significantly larger than other servo drives, perform automatic adjustment of the offset.

This function is only used when higher precision adjustment is required to further reduce torque ripple. Generally no adjustments are required

The operation steps of the automatic adjustment of the offset value of the motor current detection signal are as follows:

①Press Ⓜ key to switch to auxiliary function mode " FN000 ".

②Press Ⓐ or Ⓥ key to display " FN00E ".

③Press Ⓢ key for more than 1 sec , and " CuR_o " displays.

④Press Ⓜ key to realize the automatic adjustment of the offset. after clearing" donE " will blink for about 1 sec.

⑤"donE" display and returned

⑥Press Ⓢ key, and return to " FN00E ".

7.11 Manually adjust Motor Current Detection Signal Offset (Fn00F)

This function is only used when higher precision adjustment is required to further reduce torque ripple. Generally no adjustment is required.

> **POINTS**
>
> When performing manual adjustment, if this function executed by mistake, the characteristics may be dreduced.
>
> When performing manual adjustments, follow the precautions below.
>
> • Make the servo motor rotate at about 100 min^{-1}。
>
> • Observe the torque command monitoring in the analog monitoring state, and reduce the fluctuation.

The operation steps of manual adjustment of the offset value of the motor current detection signal are as follows:

①Press Ⓜ key to switch to auxilairy function mode " FN000 ".

②Press Ⓐ or Ⓥ key to display " FN00F ".

③To adjust the U-phase offset, press Ⓢ key for about 1 sec , and " Cu1_o " displayed

④Press Ⓢ key (less than 1 sec), and display U-phase offset.

⑤Press Ⓐ key or Ⓥ key to change the offset. The torque command must also be carefully adjusted while observing the monitor signal.

⑥Press Ⓢ key (less than 1 sec) to confirm U-phase current offset adjustment.

⑦Adjust the offset of V- phase. Press Ⓢ key for about 1 sec , and " Cu2_o "display.

⑧Press Ⓢ key (less than 1 sec), to display the offset value of V- phase.

⑨Press Ⓐ or Ⓥ key to change the offset. The torque command must also be carefully adjusted while observing the monitor signal.

⑩Press Ⓢ key (less than 1 sec), and " Cu2_o " is displayed, to confirm the W-phase current offset adjustment.

⑪Press Ⓢ key for about 1 sec , and " FN00F " is displayed.

7.12 Writing Prohibition Setting (Fn010)

Function to prevent accidental writing of parameters.

1) Operation steps

Table 7-7 Parameter setting

Parameter value	Functional operation
0000	Writing permission (write prohibition disabled)
0001	Write prohibition (parameters cannot be written after turning on the power next time)

The operation steps of the automatic adjustment of the offset value of the motor current detection signal are as follows:

①Press Ⓜ key to switch to auxiliary function mode " FN000 ".

②Press Ⓐ or Ⓥ key to display " FN010 ".

③Press Ⓢ key for about 1 sec or more.

④Press Ⓐ or Ⓥ key, and set it to any of the following values. Refer to Table 8-8 .

⑤" donE " display and return to " P000_ ".

⑥Press Ⓢ key for about a sec , and return to " FN010 ".

⑦ To make the setting effective, please restart the power of the servo drive.

Note: This function of FN010 cannot be realized in the debugging software now.

2) Related parameters

All Pn□□□ and auxiliary functions (Fn□□□) listed in "Table 7-8 Auxiliary Function List of Writing Prohibition Setting " can be set as write-prohibited or write-permitted.

Table 7-8 Auxiliary Function List of Writing Prohibition Setting

Fn No.	Function	Operation by operation panel	By HC ServoWorks HC ServoWorks.Y 7
Fn002	JOG	1	1
Fn003	Origin Search	1	1
Fn004	Jog Program	1	1
Fn005	Initialize Parameters	1	1
Fn006	Clear Alarm History	1	1
Fn008	Reset Absolute Encoder	1	1
Fn009	Auto tuning Analog (Speed/Torque) Reference Offset	1	1
Fn00A	Manually Adjust Speed Reference Offset	1	1
Fn00B	Manually Adjust Torque Reference Offset	1	1
Fn00C	Adjust Analog Monitor Output Offset	1	1
Fn00D	Adjust Analog Monitor Output Gain	1	1
Fn00E	Auto tuning Motor Current Detection Signal Offset	1	1
Fn00F	Manually Adjust Motor Current Detection Signal Offset	1	1
Fn013	Multiturn Limit Setting after Multiturn Limit Disagreement Alarm	1	1
Fn01B	Initialize Vibration Detection Level	1	1
Fn200	Tuning-less Level Setting	1	1

➢ Note: When the Writing Prohibition Setting (Fn010) is valid, if the above auxiliary functions are executed, the display on the panel operator is as follows, and the corresponding operations cannot be performed. To perform these auxiliary functions, the Fn010 must be changed to disabled, and " no oP " will be displayed on the panel, flashing for 1 second.

7.13 Display Servo Motor Model (Fn011)

To display the model, voltage, capacity, encoder type, and encoder resolution of the servo motor connected to the servo drive. If the servo drive is customized, the corresponding number of the product of this specification will also be displayed.

The operation steps are as follows:

①Press Ⓜ key to switch to auxiliary function mode " FN000 ".

②Press Ⓐ or Ⓥ key to display " FN011 ".

③Press Ⓢ key for about 1 sec to display models and voltage, such as " F0132 ": 01 means 220V, 3 means high inertia, 2 means X 6 series servo motor.

④Press Ⓜ key to display the capacity of the servo motor, such as " P0040 " : 400W .

⑤Press Ⓜ key to display the encoder type and resolution, such as " E0023 "for incremental 23-bit encoders," E0123 " is an absolute 2 3-bit encoder.

⑥Press Ⓜ key and the special specification number of the servo drive will displaye. " Y0000 " indicates a standard product.

⑦Press Ⓢ key for about 1 sec and return to " FN011 ".

7.14 Display Software Version (Fn012)

To display the software version of the servo drive and encoder.

The operation steps to display the software version of the servo drive and encoder are as follows.

①Press Ⓜ key to switch to auxiliary function mode " FN000 ".

②Press Ⓐ or Ⓥ key to display " FN012 ".

③Press Ⓢ for more than 1 sec , the FPGA version will be displayed, such as " R.2A11 ".

④Press Ⓜ key to display the software version of the servo drive, such as "U. 2B03 ".

⑤Press Ⓜ key to display the model information version of the servo sheet, such as "P .2B06 ".

⑥Press Ⓢ key and return to" FN012 ".

7.15 Initialize Vibration Detection Level(Fn01B)

This function is to automatically set the Vibration Detection Level (Pn312) in order to detect the "Vibration Alarm (A.520)" and "Vibration Warning (A.911)" more accurately after detecting the mechanical vibration in the running state.

The vibration detection function can detect the vibration component at a certain speed of the servo motor. When the vibration exceeds the detection value calculated by the following detection formula , an alarm or warning will be displayed through the Vibration Detection Selection (Pn310).

$$\text{Detection value}=\text{Vibration detection value}\ \ (Pn312[min^{-1}])\ \times \text{Detection sensitivity}(Pn312[\%])/100$$

<Remarks> _

• This function can only be set when the vibration is detected by the factory-set Vibration Detection Level (Pn312) and the "Vibration Alarm (A.520)" or "Vibration Warning (A.911)" is not displayed at the correct time .

• Depending on the state of the machine used, the detection sensitivity of vibration alarms and warnings may vary. In this case, fine-tune the Vibration Detection Sensitivity (Pn311) by referring to the detection formula above.

POINTS

• If the servo gain is not set properly, it may be difficult to detect vibration. And it may not be possible to detect all vibrations.

• Please set an appropriate Moment of Inertia Ratio (Pn103). If the settings are not correct, vibration alarms and vibration warnings may be falsely detected or may not be detected.

• To set this function, the customer must have the operation with the actual command.

• Execute after changing to the operating state where the vibration detection value is to be set. If the setting is made while the servo motor is rotating at low speed, vibration will be detected immediately after the servo is turned ON. If it is set when the servo motor is running at a speed less than 10% of the maximum speed, "Error" will be displayed.

1) Steps

The operation steps of the automatic adjustment of the motor current detection offset are as follows:

①Press Ⓜ key to switch to auxiliary function mode " FN000 ".

②Press Ⓐ or Ⓥ key to display " FN013 ".

③Press Ⓢ key for about 1 sec , and " dINIT " displayed

④Press Ⓜ key, then " dINIT " flashes, it will detect and update the vibration value. The detection and update will continue until the MODE/SET key is pressed again.

⑤Press Ⓜ again at the appropriate time to finish the detection and updates. "donE" displays after the setting is completed normally. "Error" will display when the setting cannot be completed normally.

⑥Press Ⓢ key to return to " FN013 ".

2) Related parameters

The relevant parameters are as follows:

Table 7-9 Parameters for Vibration detection initialization

	Vibration Detection Sensitivity Speed Position Torque			When enabled	Classification
Pn 311	Setting range	Unit	Factory setting	Immediately	Setup
	50～500	1%	100		
	Vibration Detection Level Speed Position Torque			When enabled	Classification
Pn 312	Setting range	Unit	Factory setting	Immediately	Setup
	0～5000	1 min^{-1}	50		

Note: Pn312 is set by the detection value of vibration detection , so adjustment is not required. The detection sensitivity is set by Pn311.

Table 7-10 Pn310 Parameter setting

Parameter		Content	When enabled	Classification
Pn 310	n.□□□	Do not detect vibration d. (Factory setting)	Immediately	Setup
	n.□□□	A warning occur after vibration is detected (A.911).		
	n.□□□	An Alarm occur(A. 520) after vibration is detected.		

7.16 Software Reset (Fn030)

This function resets the servo drive internally by software. Sometimes it is necessary to restart the power supply after changing the parameter setting. Using this function can make the setting effective without restarting the power supply.

POINTS

- This function must be operated at servo OFF.
- This function has nothing to do with the upper device and can reset the servo drive. Be sure to disconnect with the upper device.

The operation steps of software reset are as follows:

①Press Ⓜ key to switch to auxiliary function mode " FN000 ".

②Press Ⓐ or Ⓥ key to display " FN030 ".

③Press Ⓢ key for about 1 sec to display " SrSt1 ".

④Press Ⓐ key until " SrSt5 " displayed.

⑤Press Ⓜ key, the panel display disappears.

⑥Press Ⓢ key for about 1 sec and return to" FN030 ".

Chapter 8 Monitoring Display

Chapter8 Monitoring Display 200
8.1 Monitoring Display List 201
8.2 Operation Example of Monitoring Display 201
8.3 How to Read 32-bit Decimal Display 201
8.4 Input Signal Monitoring 201
8.4.1 Confirmation of Input Signal Status 202
8.4.2 How to Judge Display State of the Input Signal 202
8.4.3 Display Examples of Input Signal 202
8.5 Output Signal Monitoring 203
8.5.1 Confirmation of Output Signal Status 203
8.5.2 Judgment Method of Output Signal Display Status 203
8.5.3 Examples of Output Signal Display 203
8.6 Monitoring Display at Power-ON 203

8.1 Monitoring Display List

Monitoring display is to display the command value, the status of input and output signals, and the internal status of the servo drive. The monitoring display list is as follows .

Table8-1 Monitoring display list

Un No.	Display content	Unit
Un000	Motor Speed	r/min
Un001	Speed Command	r/min
Un002	Torque Command (Related to rated torque)	%
Un003* 3	Rotation Angle 1 (32-bit decimal display)	Number of pulses from origin
Un004	Rotation Angle2 (Angle from origin (Electrical angle))	deg
Un005* 1	Input Signal Monitoring	—
Un006* 2	Output Signal Monitoring	—
Un007	Input Command Pulse Speed (Valid only for position control)	r/min
Un008	Deviation Counter (Position deviation) (Valid only for position control)	Command unit
Un009	Accumulated Load Ratio (100% rated torque: Display effective torque in 10s cycle)	%
Un00A	Regenerative Load Ratio (100% handleable regenerative power%: Display regenerative power consumption in 10s cycle)	%
Un00B	Power Consumed by DB Resistance (100% handleable power wiht the dynamic brake: DB power consumption in 10s cycle)	%
Un00C	Input Command Pulse Counter (32-bit decimal display)	Command unit
Un00D	Feedback Pulse Counter (incremental data of 4 times of the number of encoder pulses: 32-bit decimal display)	Encoder pulse
Un00E	Fully-closed Loop Feedback Pulse Counter (incremental data of 4 times of the number of fully-closed loop feedback pulse : 32-bit decimal display)	External encoder pulse
Un012	Total Operation Time	100ms
Un013* 3	Feedback Pulse Counter (32-bit decimal display)	Command unit
Un014	Effective Gain Monitor	—
Un015	Safety I/O Signal Monitor	—
Un020	Rated Motor Speed	r/min
Un021	Maximum Motor Speed	r/min

Note:* 1 . Please refer to "Section 8.4 Input Signal Monitoring" .

* 2. Please refer to "Section 8.5 Output Signal Monitoring".

* 3. Please refer to " Section 8.3 How to Read 32-bit Decimal Display".

8.2 Operation Example of Monitoring Display

Please refer to " Section 3.4 Operation of Monitoring Display (Un□□□) " for details.

8.3 How to Read 32-bit Decimal Display

For details, please refer to " Section 3.3.1 Numerical setting ".

8.4 Input Signal Monitoring

The state of the input signal can be confirmed by " Input Signal Monitoring (Un005)". The confirmation procedure,

the judgment method of the display, and the examples are as follows .

8.4.1 Confirmation of Input Signal Status

The steps to confirm the input signal status by Un005 are as follows :

1) Press Ⓜ key to switch to the Monitoring function mode " Un005 ".

2) After pressing Ⓢ for 1 sec, the current status will be displayed. The state is displayed by the operation panel. For the judgment method of the display, please refer to "Section 8.4.2 Judgment Method of the Display State of the Input Signal".

3)Press Ⓢ for about 1 sec and return to " Un005 ".

8.4.2 How to Judge Display State of the Input Signal

The state of the assigned input signal is displayed by the lighting state of the segment (LED) on the operation panel. The relationship between input pins and LED numbers is shown below.

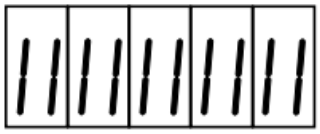

Upper: OFF (H-level)

Lower: ON (L-level;)

- The upper segment (LED) lights up when the input signal is OFF (open circuit) .
- The lower segment (LED) lights up when the input signal is ON (short circuit).

LED No.	Input pins No.	Factory setting
1	CN1-40	/S-ON
2	CN1-41	/P - CON
3	CN1-42	P-OT
4	CN1-43	N-OT
5	CN1-44	/ALM-RST
6	CN1-45	/ALM-RST
7	CN1-46	/N-CL
8	CN1-47	SEN

8.4.3 Display Examples of Input Signal

A display example of an input signal is shown below :

- When the / HomeSwitch signal is ON

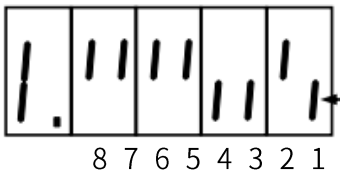

The lower No.1 lights up.

- When the /HomeSwich signal is OFF

The lower No.1 lights up

8.5 Output Signal Monitoring

The state of the output signal can be checked through "Output Signal Monitor (Un006)". The confirmation procedure, the judgment method of the display, and the display example are as follows..

8.5.1 Confirmation of Output Signal Status

To confirm the Output Signal status through Un006 are as follows :

1) Press Ⓜ key to switch to the monitoring function mode " UN006 ".

2) After pressing Ⓢ for 1 sec, the current status will be displayed. The state is displayed through the segments of the operation panel. For the judgment method of the display, please refer to " Sectoin 8.5.2 Judgment Method of the Output Signal Display State".

3) Press and hold Ⓢ key for about 1 sec , return to " UN006 ".

8.5.2 Judgment Method of Output Signal Display Status

The assigned output signal is displayed by the lighting state of the segment (LED) of the operatoin panel. The correspondence between output pins and LED No. is shown in the table below.

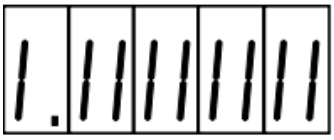

Upper: OFF (H-level)

Lower: ON (L-level)

8 7 6 5 4 3 2 1 No.

- The upper segment (LED) lights up when the output signal is OFF (open circuit) .
- The lower segment (LED) lights up when the output signal is ON (short circuit) .

LED No.	Output pins	Factory setting
1	CN1-31, -32	ALM
2	CN1-25, -26	/COIN or /V-CMP
3	CN1-27, -28	/TGON
4	CN1-29, -30	/S-RDY
5	CN1-37, -38	—
6	—	—
7	—	—
8	—	—

8.5.3 Examples of Output Signal Display

Display examples of output signals are shown below.

- When the ALM signal is activated (Alarm occurs at H-level)

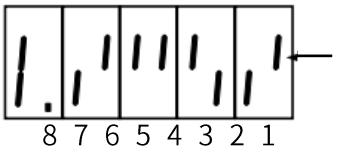

The lower No. 1 lights up.

8.6 Monitoring Display at Power-ON

If set Un number through Pn52F, the data of the Un number will be displayed on the operation panel when the power is turned on. However, if it has been set to FFF [Factory setting], the status (bb, run, etc.) will be displayed when the power is turned on.

Table 8-2 Pn52F parameter setting

Pn52F	Monitor Display at Startup			Position Speed Torque	
	Setting range	Unit	Factory setting	When enabled	Classification
	0 - FFF	——	FFF	Immediately	Setup

Chapter 9 Fully-closed Loop Function

Chapter 9 Fully-closed Loop Function 205
9.1 Fully-closed Loop Model Establishment and Connection 206
9.2 Parameters Setting for Fully-closed Loop 207
9.3 Fully-closed Loop Setting Procedure 209
9.4 Fully-closed Loop Parameter Setting 209
9.4.1 Fully-closed Loop Encoder Direction Setting 209
9.4.2 Fully-closed Loop Encoder Pitch Setting 210
9.4.3 Electronic Gear Ratio Setting 211
9.4.4 Selection of Fully-closed Loop Speed Feedback 211
9.4.5 JOG in Fully-closed Loop Control 211
9.5 Fully-closed Loop Frequency Division Pulse Output Function 211
9.6 Fully-closed Loop Alarms and Solutions 212

9.1 Fully-closed Loop Model Establishment and Connection

The fully-closed loop system uses the auxiliary encoder to feed back the actual position of the mechanical end to the servo drive to improve the backlash of the guide screw of the transmission system, the flexibility of the coupling or belt drive, the temperature and thermal expansion of the transmission system, and the linearity of the transmission system Or end sliding and other factors to achieve high and accurate positioning.

Fully-closed loop encoder cables must use shielded twisted-pair cables.

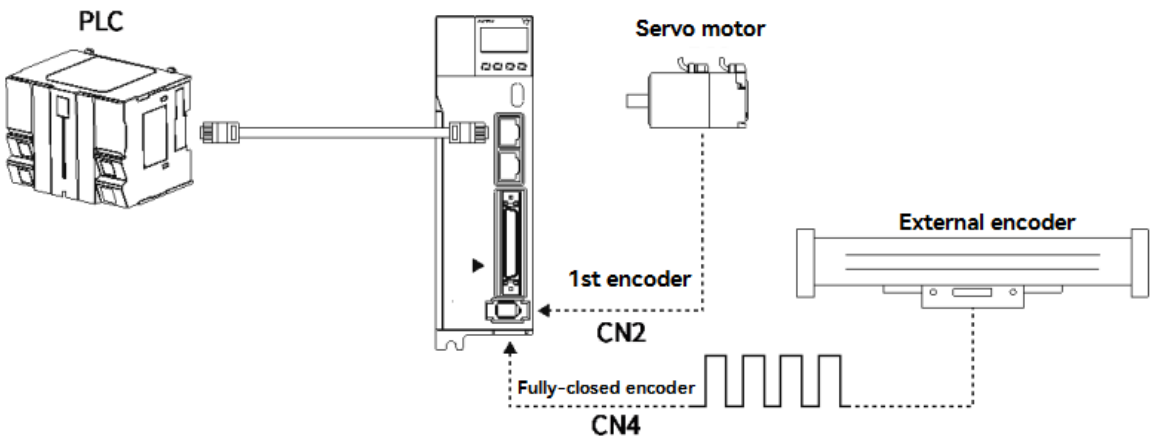

Figure 9-1 Fully-closed loop model diagram

Connect the fully-closed loop encoder (CN4) according to the pin definition in Table 9-1 after soldering, the first encoder (CN2) is connected to the servo motor, and the communication between the upper controller and the servo drive is established through a network cable connection. The CN4 pin diagram is as follows. (The position of CN4 is different for different servo drive, please refer to Section 1.4 and 1.5 for details)

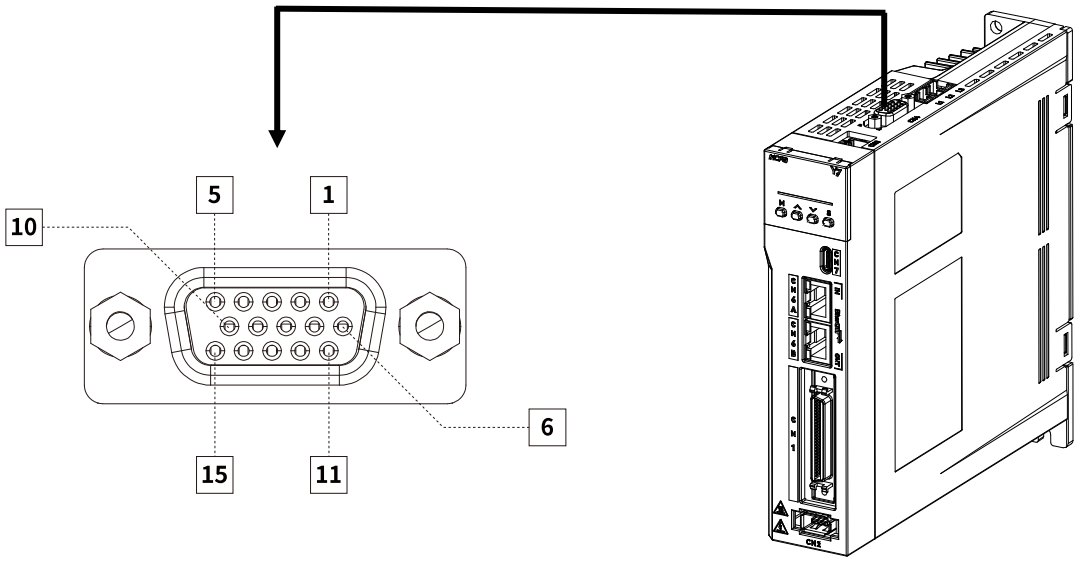

Figure 9-2 CN4 pins arrangements

Table 9-1 Pin definition of fully-closed loop grating ruler

Pin	Incremental ABZ encoder with Differential hall sensors	SinCos encoder with Differential hall sensors and Z-signal	BISS Encoder	Tamagawa Encoder
1	+5V output Current output≤3 00mA _	+5V output Current output≤3 00mA _	+5V output Current output≤3 00mA _	+5V output Current output≤3 00mA _
2	0V output	0V output	0V output	0V output

3	Hall U+	Hall U+	—	—
4	Hall U-	Hall U-	—	—
5	Hall V +	Hall V +	—	—
6	Incremental encoder A -	Sine encoder Sin -	BISS -C CLK -	Serial DATA -
7	Incremental encoder B-	Sine encoder Cos -	BIS SC DATA -	—
8	Incremental encoder Z -	Incremental encoder Z -	—	—
9	Hall W +	Hall W +	—	—
1 0	Hall V -	Hall V -	—	—
11	Incremental encoder A +	Sine encoder Sin +	BISS -C CLK+	Serial DATA+
12	Incremental encoder B +	Sine encoder Cos +	BIS SC DATA+	—
13	Incremental encoder Z +	Incremental encoder Z +	—	—
1 4	Hall W -	Hall W -	—	—
1 5	Temperature sensor signal	Temperature sensor signal	Temperature sensor signal	Temperature sensor signal
Shell	Shield	Shield	Shield	Shield

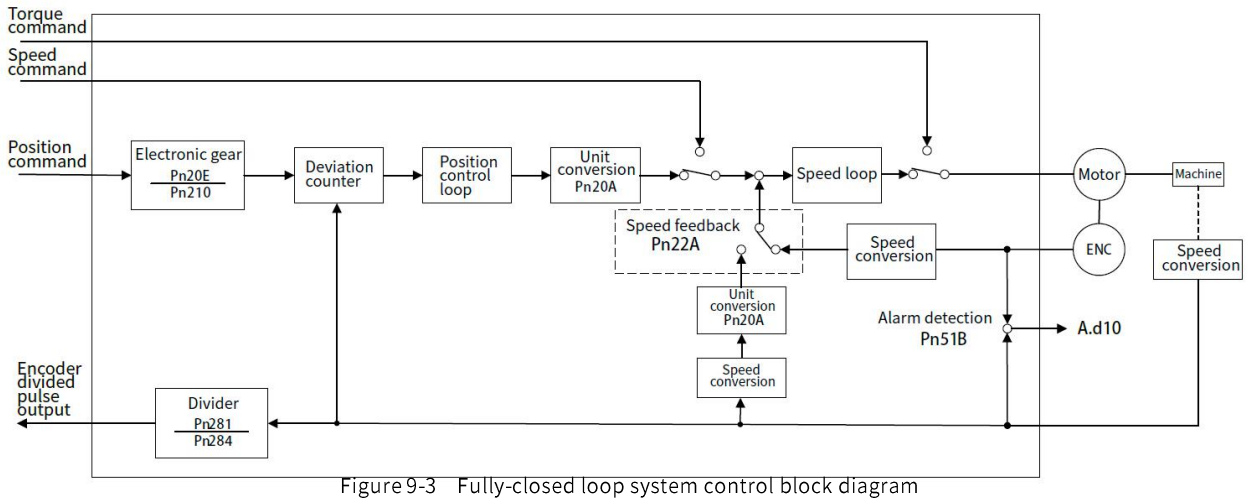

Figure 9-3 Fully-closed loop system control block diagram

9.2 Parameters Setting for Fully-closed Loop

Parameter	Name	Setting range	Factory setting	Unit	When enabled
Pn002.3	External Encoder	0-4 _	0	-	After restart

0	Do not use
1	Use in standard running direction
2	Reserved parameters (Do not change)
3	Use in reverse direction
4	Reserved parameters (Do not change)

Pn20A	Number of External Encoder Scale Pitches	4-1048576 _	3 2768	1 P/R ev	After restart

Pn22A.3	Speed FeedbackSelection	0-1 _	0	-	After restart
	0	Use motor encoder speed			
	1	Use external encoder speed			
Pn281	Encoder Output Resolution	1-4096 _	2 0	1 pulse edge/pitch	After restart
Pn284	Number of Pulses corresponding to the Grating Pitch	0 000-FFFF	0	Pulse/pitch	After restart
Pn51B	Motor-Load Position Deviation Overflow Detection Level	0-1073741824 _	1 000	1 command unit	Immediately
Pn607.0	Second Encoder Type Selection	0-5 _	0	-	After restart
	0	HCFA encoder			
	1	BISS encoder			
	2	YAS encoder			
	3	ABZ encoder			
	4	AB encoder			
	5	SinCOS encoder			
Pn20E	(Electronic Gear Ratio Numerator)	1-1073741823 _	4	-	Effective after disabled
Pn210	(Electronic Gear Ratio Denominator)	1-1073741823 _	1	-	Effective after disabled

9.3 Fully-closed Loop Setting Procedure

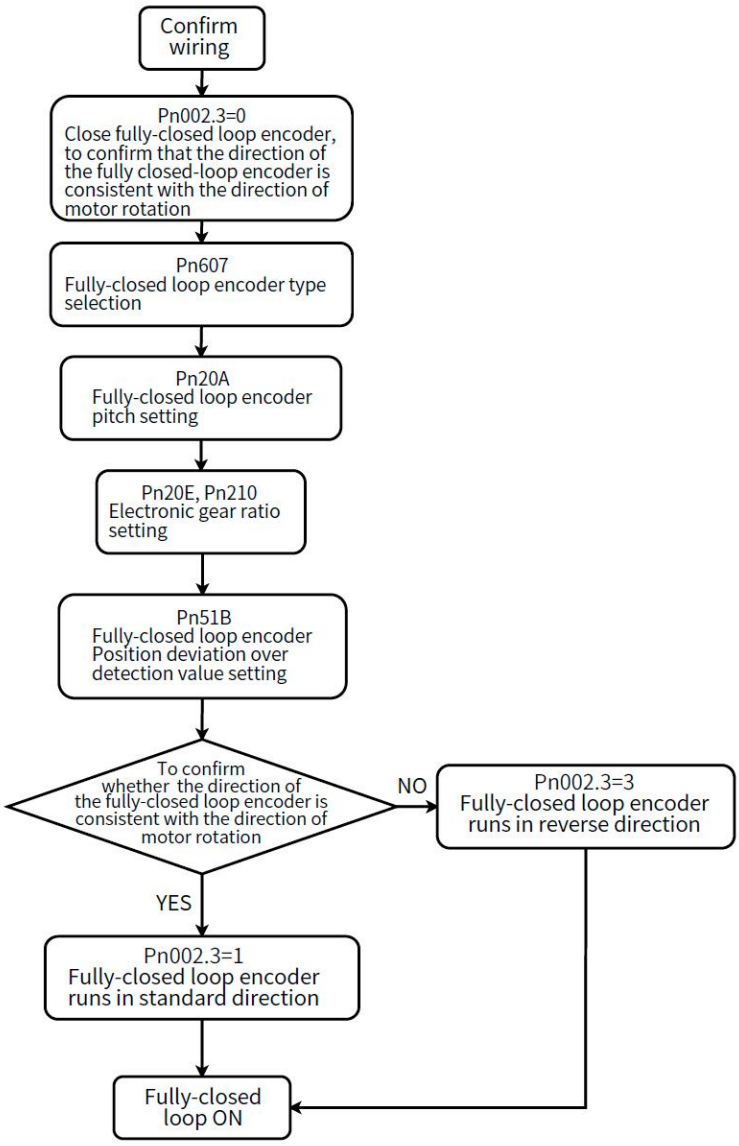

Figure 9-4 Fully-closed loop system setting procedures

9.4 Fully-closed Loop Parameter Setting

9.4.1 Fully-closed Loop Encoder Direction Setting

Table 9-2 Fully –closed loop encoder direction setting

Parameter	Name	Setting range	Factory setting	Unit	When enabled
Pn002.3	Fully closed-loop encoder using direction setting	0-4 _	0	-	After restart

0	Do not use
1	Use in standard running direction
2	Reserved parameters (Do not change)
3	Use in reverse direction
4	Reserved parameters (Do not change)

Before using the fully-closed loop function, please make sure that the direction of the fully-closed loop encoder is consistent with the direction of motor rotation. For the direction setting of the motor rotation (Pn000.0), refer to Section 5.3.4 and the steps are as follows:

1. Confirm that the fully-closed loop system has been built and the parameter setting is completed (At this time, Pn 002.3= 0, the feedback of the fully-closed loop encoder defaults to the feedback in the standard running direction);

2. Enter into the monitoring display of HCServoWorks , check "Feedback pulse counter" and "Fully-closed loop feedback pulse counter";

3. Perform speed J OG at this time, and check the monitoring panel of the host controller, and confirm whether the values of "Feedback pulse counter" and "Fully-closed loop feedback pulse counter" increase or decrease at the same time ;

4. If the feedback values of "Feedback pulse counter" and "Fully-closed loop feedback pulse counter" do not increase or decrease at the same time, parameter adjustment is required; the value of Pn 002.3 can be modified; after modification, repeat the above operation until the feedback value are the same.

Warning: For example, the feedback values of "Feedback pulse counter" and "Fully-closed loop feedback pulse counter" are not incremented or decremented at the same time. At this time, when the position mode is used, a speeding phenomenon will occur. Otherwise , the machine tool will be damaged.

9.4.2 Fully-closed Loop Encoder Pitch Setting

Table 1 0-3 Fully-closed loop encoder pitch setting

Parameter	Name	Setting range	Factory setting	Unit	When enabled
Pn20A	Number of External Encoder Scale Pitches	4-1048576	32768	Pitch / R ev	After restart

Parameter function: The number of AB pulses corresponding to the fully-closed loop when the motor rotates one revolution;

The fully-closed-loop encoder pulse calculation method corresponding to one revolution of the motor can be estimated from physical quantities; If the fully-closed-loop encoder pitch (Pn20A) is not set correctly, the error between the feedback position of the fully-closed-loop encoder and the motor encoder will gradually increase due to long-term operation, and eventually alarm A.d10 occurs.

When the machine uses a screw drive and a fully-closed loop encoder to form a fully-closed loop control, it is necessary to use the lead of the screw and the resolution of the fully-closed loop encoder to calculate the number of pulses of the fully-closed loop encoder corresponding to one revolution of the motor. If the specifications of the screw rod and fully-closed loop encoder have been confirmed , the user can directly estimate Pn 20A from the theoretical value.

Example:

If the screw lead is 5 mm, the resolution of the grating ruler (fully-closed-loop encoder) is 1 μm ;

$$\frac{5mm}{1\mu m}=\frac{5000\mu m}{1\mu m}=5000\ pulse=Pn20A$$

When the motor has one revolution, the fully-closed loop encoder feedsback has 5000 pulses .

9.4.3 Electronic Gear Ratio Setting

When using a fully-closed loop, the setting of the gear ratio will affect the number of feedback pulses of the fully-closed loop encoder;

Table 9-4 Electronic gear ratio setting

Parameter	Name	Setting range	Factory setting	Unit	When enabled
Pn20E	Electronic Gear Ratio (Numerator)	1-1073741823 _	4	-	Effective after disabled
Pn210	Electronic Gear Ratio (Denominator)	1-1073741823 _	1	-	Effective after disabled

Example: Pn 20A=5000

The gear ratio is set to 1:1, one motor revolution, and the fully-closed loop encoder feedback 5,000 pulses .

The gear ratio is set to 4 :1, one motor revolution, and the fully-closed loop encoder feed back 1250 pulses.

The gear ratio is set to 1: 2 , one motor revolution, and the fully-closed loop encoder feedback 10,000 pulses.

9.4.4 Selection of Fully-closed Loop Speed Feedback

When Pn 002.3=0 (No external encoder), this parameter cannot be used.

Table 9-5 Fully- closed loop speed feedback selection setting

Parameter	Name	Setting range	Factory setting	Uunit	When enabled
Pn22A.3	Speed Feedback Selection	0-1 _	0	-	After restart

0	Use motor encoder speed
1	Use external encoder speed

9.4.5 JOG in Fully-closed Loop Control

After confirming that the wiring and parameter settings are correct:

1. Enter into the monitoring panel of the HCS ervoWorks, check the "Feedback pulse counter" and "Fully-closed loop feedback pulse counter" and record the current value.

2. Enter into the "JOG" of the HCServo Works, set the jogging speed on the JOG operation panel, and enable the servo drive. Refer to Section 9.4.1 to make sure that the direction of the fully-closed loop encoder is consistent with the direction of motor rotation.

3. Click the program JOG , and the operating conditions can be set by yourself;

Assume that the first encoder resolution = M , Fully-closed loop encoder pitch (Pn 20A) = N , Gear ratio X :Y ,

Program JOG moving distance = L , Program J OG moving speed = 500 , Program JOG moving times = 1 , Program JOG running mode = 0 (Forward-rotation);

Then the number of motor revolutions $R=\frac{L}{N}\times\frac{X}{Y}$, at this time the value of "Feedback pulse counter" should be M× R, and the value of "Fully-closed loop feedback pulse counter" should be N×R.

9.5 Fully-closed Loop Frequency Division Pulse Output Function

Table 9-6 Fully- closed loop frequency division pulse output function setting

Parameter	Name	Setting range	Factory setting	Unit	When enabled
Pn281	Encoder Output Resolution	1-4096	20	Edge/Pitch	After restart
Pn284	Number of Pulses corresponding to the Grating Pitch	0 000-FFFF	0	Pulse/Pitch	After restart

Set the encoder output resolution of the encoder frequency division pulse output (PAO, /PAO, PBO, /PBO, refer to Section 2.6.1) signal sent by the servo drive to the upper device .

The number of frequency division pulse = $\frac{Pn281}{Pn284}$;

Setting example:

Pn 281=4 , Pn 284=1 , gear ratio 1:1;

PLC sends a pulse command to servo drive A, then servo drive B receives 4 edges ;

Pn 281=4 , Pn 284=1 , gear ratio 2 :1;

PLC sends a pulse command to servo drive A, then servo drive B receives 8 edges ;

Pn 281=4 , Pn 284=1 , gear ratio 1: 2 ;

PLC sends a pulse command to servo drive A, then servo drive B receives 2 edges ;

Pn 281=2 , Pn 284=1 , gear ratio 1:1;

PLC sends a pulse command to servo drive A, then servo drive B receives 2 edges ;

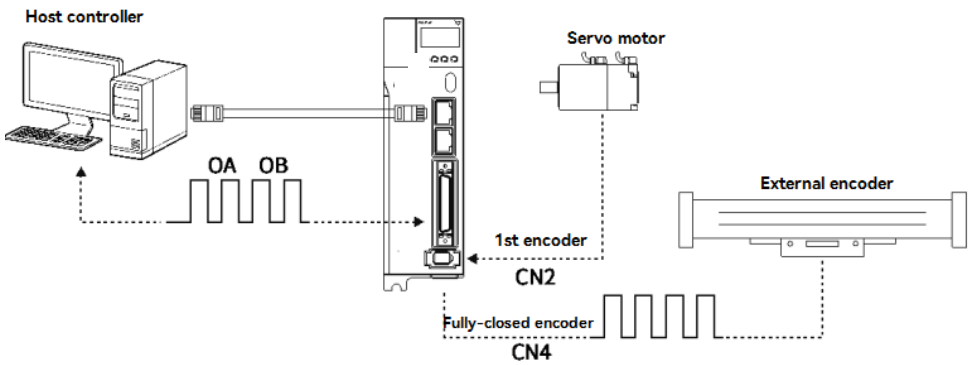

Figure 9-5 Diagram of frequency division pulse of fully-closed loop system

9.6 Fully-closed Loop Alarms and Solutions

Table 9-7 Fully- closed loop alarms and solutions

A.d10 Excessive Fully-closed loop position deviation		
Trigger conditions and reasons	Condition	Fully-closed loop position deviation is too large
	Reason	1. The setting value of Pn 51B is too small;
		2. Whether the connector is loose or there is a problem with the connection
Inspection and troubeshooting	1. Check whether the setting value of Pn 51B is reasonable, and it can be increased appropriately; 2. Check the wiring.	
A.CF1 Fully-closed loop encoder communication failure		
Trigger conditions and reasons	Condition	Fully-closed loop encoder communication failure
	Reason	1. There is something wrong with the CN4;
		2. Wrong selection of fully – closed loop encoder type.
Inspection and troubeshooting	1. Check whether there is any welding error in the C N4 2. Check the setting of Pn 607.0	

Chapter 10 Alarm Display

Chapter 10 Alarm Display 213
10.1 When an Alarm Occurs 214
10.1.1 Alarm List 214
10.1.2 Causes and Troubleshooting 217
10.2 Warning Display 230
10.2.1 Warning List 230
10.2.2 Causes of Warnings and Troubleshooting 231
10.3 Causes and Troubleshooting Based on the Opeation and Conditions 233

10.1 When an Alarm Occurs

This section explains the processing method when an alarm occurs.

" 10.1.1 Alarm List" explains the alarm name, the alarm content, the stop method when the alarm occurs, and whether the alarm can be reset.

" 10.1.2 Causes and Troubleshooting of Alarms " explains the causes of alarms and their treatment methods .

10.1.1 Alarm List

How to stop the alarm:

BM.1 : Depends onPn001.0. The factory setting is Dynamic Brake(DB) stop.

BM.2 : Depends onPn00B.1. The factory setting is zero-speed stop when the speed command is zero.

For torque control, generally useBM.1to stop. By setting Pn00B.1 = 1, the same stop method as BM.1 can be set. When using multiple servo motors, this stop method can be used to prevent damage to the machine due to different stop methods.

Whether the alarm can be reset:

Yes: The alarm can be cleared by alarm reset. However, if the cause of the alarm is not completely eliminated, the alarm cannot be dismissed.

No: The alarm cannot be cleared by alarm reset .

The alarm list is as follows :

Table 10-1 List of alarms

Alarm No.	Alert name	Content	How to stop when an alarm occurs	Whether the alarm can be reset
A.020	Parameter Checksum Error	There is an error in the parameter data in the servo drive.	BM.1	No
A.021	Parameter Format Error	There is an error in the parameter data format in the servo drive..	BM.1	No
A.022	System Checksum Error	There is an error in the parameter data in the servo drive.	BM.1	No
A.030	Main Circuit Detector Error	There is an error in the detection data for the main circuit	BM.1	Yes
A.040	Parameter Setting Error	A parameter setting is outside of the setting range	BM.1	No
	Output Pin Definition Repeation	Output pin definition is repeated.	BM.1	No
A.041	Frequency Division Pulse Output Error	Encoder frequency division pulse number (Pn212) is ourside of the setting range .	BM.1	No
A.042	Parameter Combination Error	The combination of some parameters exceeds the setting range.	BM.1	No
A.044	Semi-Closed/Fully-Closed Loop Control Parameter Setting Error	Optional modules and Pn00B.3, Pn002.3settings do not match .	BM.1	No
A.050	Combination Error	The capacities of the servo drive and Servo motor do not match. .	BM.1	Yes
A.051	Unsupported Device Alarm	An unsupported device was connected	BM.1	No
A.0 8 0	Linear Encoder Pitch Setting Error	The setting of Pn282 (Linear Encoder Scale Pitch) has not been changed from the default setting	BM.1	No
A.0b0	Invalid Servo ON Command Alarm	The /S-ON (Servo ON) signal was input from the host controller after a utility function that turns ON the Servomotor was executed..	BM.1	Yes
A.100	Overcurrent detection	An overcurrent flowed through the power transistor or the heat sink overheated .	BM.1	No
A.300	Regeneration Error	There is an error related to regeneration	BM.1	Yes

A.320	Regenerative Overload	A regenerative overload occurred	BM.2	Yes
A.330	Main Circuit Power Supply Wiring Error	• The AC power supply input setting or DC power supply input setting is not correct. • The power supply wiring is not correct	BM.1	Yes
A.400	Overvoltage	The main circuit DC voltage is too high .	BM.1	Yes
A.410	Undervoltage	The main circuit DC voltage is too low	BM.2	Yes
A.450	Main Circuit Capacitor Overvoltage	The main circuit capacitor is aging or faulty .	BM.1	no
A.510	Overspeed	The motor exceeded the maximum speed. .	BM.1	Yes
A.511	Frequency Division Pulse Output Overspeed	The pulse output speed for the setting of Pn212 (Number of Encoder Output Pulses) was exceeded	BM.1	Yes
A.520	Vibration Alarm	Abnormal oscillation was detected in the motor speed.	BM.1	Yes
A.521	Autotuning Alarm	Vibration was detected during autotuning for the tuning-less function.	BM.1	Yes
A.550	Maximum Speed Setting Error	The setting of Pn385 (Maximum Motor Speed) is greater than the maximum motor speed	BM.1	Yes
A.710	Instantaneous Overload	The Servomotor was operating for several seconds to several tens of seconds under a torque that largely exceeded the rating..	BM.2	Yes
A.720	Continuous Overload	The Servomotor was operating continuously under a torque that exceeded the rating.	BM.1	Yes
A.730 A.731	Dynamic Brake Overload	When the dynamic brake was applied, the rotational or linear kinetic energy exceeded the capacity of the dynamic brake resistor .	BM.1	Yes
A.740	Inrush Current Limiting Resistor Overload	The main circuit power supply was frequently turned ON and OFF..	BM.1	Yes
A.7A0	Heatsink Overheating	The heat sink temperature of the servo drvie exceeds 100°C .	BM.2	Yes
A.7AB	Built-in Fan Stopped	The fan inside the servo drive stopped. .	BM.1	Yes
A.810	Encoder Backup Alarm	The power supplies to the encoder all failed and the position data was lost.	BM.1	No
A.820	Encoder Checksum Alarm	There is an error in the checksum results for encoder memory	BM.1	No
A.830	Encoder Battery Alarm	The battery voltage was lower than the specified level after the control power supply was turned ON..	BM.1	Yes
A.840	Encoder Data Alarm	There is an internal data error in the encoder..	BM.1	No
A.850	Encoder Overspeed	The encoder was operating at high speed when the power was turned ON.	BM.1	No
A.860	Encoder Overheated	The internal temperature of the encoder is too high .	BM.1	No
A.8A0	External Encoder Error	An error occurred in the external encoder	BM.1	Yes
A.8A1	External Encoder Module Error	An error occurred in the Serial Converter Unit.	BM.1	Yes
A.8A2	External Incremental Encoder Sensor Error	An error occurred in the external encoder.	BM.1	Yes
A.8A3	External Absolute Encoder Position Error	An error occurred in the position data of the external encoder	BM.1	Yes
A.8A5	External Encoder Overspeed	An overspeed error occurred in the external encoder	BM.1	Yes
A.8A6	External Encoder Overheated	An overheating error occurred in the external encoder	BM.1	Yes
A.b10	Speed Command A/D Error	An error occurred in the A/D converter for the speed command input.	BM.2	Yes
A.b11	Speed Command A/D Data Error	An error occurred in the A/D conversion data for the speed command .	BM.2	Yes

A.b20	Torque Command A/D Error	An error occurred in the A/D converter for the torque command input.	BM.2	Yes
A.b31	Current Detection Error1	The error of U-phase current detection circuit occur. .	BM.1	No
A.b32	Current Detection Error2	The error of V-phase current detection circuit occur.	BM.1	No
A.b33	Current Detection Error3	The error of current detection circuit occur..	BM.1	No
A.bF0	System Alarm 0	Internal program error 0 occurred in the servo drive..	BM.1	No
A.bF1	System Alarm 1	Internal program error 1 occurred in the servo drive. .	BM.1	No
A.bF2	System Alarm 2	Internal program error 2 occurred in the servo drive.	BM.1	No
A.bF3	System Alarm 3	Internal program error 3 occurred in the servo drive. .	BM.1	No
A.bF4	System Alarm 4	Internal program error 4 occurred in the servo drive.	BM.1	No
A.C10	Servomotor Out of Control	The Servomotor ran out of control	BM.1	Yes
A.C21	Polarity Sensor Error	An error occurred in the polarity sensor	BM.1	No
A.C22	Phase Information Disagreement	The phase information does not match.	BM.1	No
A.C50	Polarity Detection Failure	The polarity detection failed.	BM.1	No
A.C51	Overtravel Detected during Polarity Detection	The overtravel signal was detected during polarity detection	BM.1	No
A.C52	Polarity Detection Not Completed	The servo was turned ON before the polarity was detected.	BM.1	No
A.C53	Out of Range of Motion for Polarity Detection	The travel distance exceeded the setting of Pn48E (Polarity Detection Range).	BM.1	No
A.C54	Polarity Detection Failure 2	The polarity detection failed.	BM.1	No
A.C80	Encoder Clear Error or Multiturn Limit Setting Error	The multiturn data for the absolute encoder was not correctly cleared or set.	BM.1	No
A.C90	Encoder Communications Error	Communications between the encoder and servo drive is not possible.	BM.1	No
A.C91	Encoder Communications Position Data Acceleration Rate Error	An error occurred in calculating the position data of the encoder	BM.1	No
A.C92	Encoder Communications Timer Error	An error occurred in the communications timer between the encoder and servo drive.	BM.1	No
A.CA0	Encoder Parameter Error	The parameters in the encoder are corrupted	BM.1	No
A.Cb0	Encoder Echoback Error	The contents of communications with the encoder are incorrect.	BM.1	No
A.CC0	Multiturn Limit Disagreement	Different multiturn limits have been set in the encoder and the servo drive. .	BM.1	No
A. CF1	Reception Failed Error in Feedback Option Module Communications	Receiving data from the Feedback Option Module failed	BM.1	No
A. CF2	Timer Stopped Error in Feedback Option Module Communications	An error occurred in the timer for communications with the Feedback Option Module.	BM.1	No
A.d00	Position Deviation Overflow	The setting of Pn520 (Position Deviation Overflow Alarm Level) was exceeded by the position deviation while the servo was ON.	BM.1	Yes
A.d01	Position Deviation Overflow Alarm at Servo ON	The servo was turned ON after the position deviation exceeded the setting of Pn526 (Position Deviation Overflow Alarm Level at Servo ON) while the servo was OFF. .	BM.1	Yes

A.d02	Position Deviation Overflow Alarm for Speed Limit at Servo ON	If position deviation remains in the deviation counter, the setting of Pn529 or Pn584 (Speed Limit Level at Servo ON) limits the speed when the servo is turned ON. This alarm occurs if reference pulses are input and the setting of Pn520 (Position Deviation Overflow Alarm Level) isexceeded before the limit iscleared	BM.2	Yes
A.d10	Motor-Load Position Deviation Overflow	There was too much position deviation between the motor and load during fully-closed loop control	BM.2	Yes
A. Eb1 *1	Safety Function Signal Input Timing Error	An error occurred in the input timing of the safety function signal..	BM.1	No
A.F10	Power Supply Line Open Phase	The voltage was low for more than one second for phase R, S, or T when the main power supply was ON	BM.2	Yes
FL-1 *2	System Alarm	An internal program error occurred in the servo drive.	—	No
FL-2 *2			—	No
A .———	No Error Display	Normal operation.	—	—

Note: *1 . The A.Eb□, alarms can occur when a Safety Module is connected

* 2. These alarms are not stored in the alarm history. They are only displayed on the panel display .

10.1.2 Causes and Troubleshooting

When the error occurs, the panel display will display "A.□□□ or CPF□□" . The causes of and corrections for the alarms are given in the following table. Contact HCFA representative if you cannot solve a problem with the correction given in the table.

Table 10-2 Alarms caused and troubleshooting -1

Alarm No.: Alarm Name	Causes	Confirmation method	Corrections
A.020: Parameter Checksum Error (There is an error in the parameter data in the servo drive.)	The power supply voltage suddenly dropped.	Measure the power supply voltage Check the timing of shutting OFF the power supply	Set the power supply voltage within the specified range, and initialize the parameter settings
	The power supply was shut OFF while writing parameter settings.		Initialize the parameter settings and then set the parameters again..
	The number of times that parameters were written exceeded the limit.	Check to see if the parameters were frequently changed from the host controller.	The servo drive may be faulty. Replace the Servo drive. Reconsider the method for writing the parameters.
	A malfunction was caused by noise from the AC power supply, ground, static electricity, or other source	Turn the power supply to the servo drive OFF and ON again. If the alarm still occurs, noise may be the cause	Implement countermeasures against noise.
	Gas, water drops, or cutting oil entered the Servo drive and caused failure of the internal components.	Check the installation conditions	The servo drive may be faulty. Replace the Servo drive..
	A failure occurred in the servo drive.	A Turn the power supply to the servo drive OFF and ON again. If the alarm still occurs, the servo drive may have failed	The servo drive may be faulty. Replace the Servo drive..
A.021: Parameter Format Error (There is an error in the parameter	The software version of the servo drive that caused the alarm is older than the software version of the parameters specified to write	Read the product information to see if the software versions are the same. If they are different, it could be the cause of	Write the parameters from another servo drive with the same model and the same software version, and then turn the power OFF and ON again

data format in the servo drive)		the alarm.	
	A failure occurred in the servo drive.	—	The servo drive may be faulty. Replace the Servo drive..
A.022: System Checksum Error (There is an error in the parameter data in the servo drive)	The power supply voltage suddenly dropped.	Measuring power supply voltage	The servo drive may be faulty. Replace the Servo drive..
	The power supply was shut OFF while setting a utility function	Check the timing of shutting OFF the power supply	The servo drive may be faulty. Replace the Servo drive..
	A failure occurred in the servo drive.	Turn the power supply to the servo drive OFF and ON again. If the alarm still occurs, the SERVOPACK may have failed.	The servo drive may be faulty. Replace the Servo drive..
A.030: Main circuit detection part failure	Servo drive failure	—	The servo drive may be faulty. Replace the Servo drive..
A.040: Parameter Setting Error (A parameter setting is outside of the setting range.)	The capacity of the servo drive does not match the capacity of the servo motor	Confirm the capacity and combination of the servo drive and servo motor	Match the capacities of the servo drive and the servo motor.
	Servo drive failure	—	The servo drive may be faulty. Replace the Servo drive..
	A parameter setting is outside of the setting range.	Confirm the setting range of the changed parameter	Make the changed parameter a value within the setting range.
	The electronic gear ratio is outside of the setting range	Confirm whether the electronic gear ratio is 0.001<(Pn20E/Pn210) <4000	Set the electronic gear ratio to 0.001<(Pn20E/Pn210)<4000.
A.041: Frequency division pulse output setting error	Encoder frequency division pulse number (Pn212) does not meet the setting range and setting conditions	Check the setting of Pn212	Set Pn212 to an appropriate value.
A.042 *1: Parameter Combination Error	The speed of program jogging went below the setting range when the electronic gear ratio (Pn20E/ Pn210) or the Servo motor was changed.	Check to see if the detection conditions*1 are satisfied	Decrease the setting of the electronic gear ratio (Pn20E/Pn210).
	The speed of program jogging went below the setting range when Pn533 or Pn585 (Program Jogging Movement Speed) was changed.	Check to see if the detection conditions*1 are satisfied	Increase the setting of Pn533 or Pn585.
	The movement speed of advanced autotuning went below the setting range when the electronic gear ratio (Pn20E/ Pn210) or the Servomotor was changed.	Check to see if the detection conditions*1 are satisfied	Decrease the setting of the electronic gear ratio (Pn20E/Pn210).
A.044: Semi-Closed/ Fully-Closed Loop Control Parameter Setting Error	The setting of the Fully-closed Module does not match the setting of Pn002	Check Pn002.3 settings	Make sure that the setting of the Fully-closed Module agrees with the setting of Pn002
A.050: Combination Error (The capacities of the servo drive and Servomotor do not match.)	The servo drive and Servomotor capacities do not match each other	Confirm $\frac{1}{4} \leq \frac{\text{Motor capacity}}{\text{Servo drive capacity}} \leq 4$	Select a proper combination of the servo drive and servomotor capacities.
	A failure occurred in the encoder.	Replace with another servo motor, confirm that the alarm does not occur again	Replace servo motor or encoder.
	A failure occurred in the servo drive.	—	The servo drive may be faulty. Replace the Servo drive..

A.051: Unsupported Device Alarm	An unsupported Serial Converter Unit or encoder (e.g., an external encoder) is connected to the servo drive.	Check the product combination specifications.	Change to a correct combination of models.
A.0b0: Invalid Servo ON Command Alarm	The /S-ON (Servo ON) signal was input from the host controller after a utility function that turns ON the Servomotor was executed	—	Turn the power supply to the servo drive OFF and ON again. Or, execute a software reset.

Note: *1 . When any of the following two conditional formulas of the detection conditional formula is satisfied, an alarm is detected.

$$\text{Pn533 [min} - 1] \times \frac{\text{Encoder resolution}}{6 \times 10^5} \leq \frac{Pn20\text{E}}{Pn210} \qquad \text{Max. motor speed [min} - 1] \times \frac{\text{Encoder resolution}}{\text{About } 3.66 \times 10^{12}} \geq \frac{Pn20E}{Pn210}$$

Table 10-3 Alarms caused and troubleshooting -2

Alarm No.: Alarm Name	Causes	Confirmation method	Corrections
A.100: Overcurrent Detected (An overcurrent flowed through the power transistor or the heat sink overheated.)	The Main Circuit Cable is not wired correctly or there is faulty contact.	Check the wiring.	Correct the wiring.
	There is a short-circuit or ground fault in a Main Circuit Cable.	Check for short-circuits across Servomotor phases U, V, and W, or between the ground and Servomotor phases U, V, and W	The cable may be shortcircuited. Replace the cable
	There is a short-circuit or ground fault inside the Servo motor.	Check for short-circuits across Servomotor phases U, V, and W, or between the ground and Servomotor phases U, V, or W.	The servo motor may be faulty. Replace the servo motor
	There is a short-circuit or ground fault inside the servo drive.	Check for short-circuits across the Servomotor connection terminals U, V, and W on the servo drive, or between the groundand terminals U, V, or W.	The servo motor may be faulty. Replace the servo motor
	The regenerative resistor is not wired correctly or there is faulty contact.	Check the wiring.	Correct the wiring.
	The dynamic brake (DB, emergency stop executed from the servo drive) was frequently activated, or a DB overload alarm occurred	Check the power consumed by the DB resistor to see how frequently the DB is being used. Or, check the alarm display to see if a DB overload alarm (A.730 or A.731) has occurred.	Change the servo drive model, operating methods, or the mechanisms so that the dynamic brake does not need to be used so frequently
	The regenerative processing capacity was exceeded.	Use the regenerative load ratio (Un00A) to confirm the frequency of the regenerative resistor	Recheck the operating conditions and load.
	The servo drive regenerative resistance is too small.	Use the regenerative load ratio (Un00A) to confirm the frequency of the regenerative resistor	Change the regenerative resistance to a value larger than the servo drive minimum allowable resistance.
	A heavy load was applied while the Servomotor was stopped or running at a low speed.	Check to see if the operating conditions exceed Servo Drive specifications	Reduce the load applied to the Servomotor. Or, increase the operating speed
	A malfunction was caused by noise.	Improve the noise environment, e.g. by improving the wiring or installation conditions, and check to see if the alarm still occurs	Implement countermeasures against noise, such as correct wiring of the FG. Use an FG wire size equivalent to the SERVOPACK’s main circuit wire size..

	Servo drive failure	—	Turn the power supply to the servo drive OFF and ON again. If the alarm still occurs, the servo drive may be faulty. Replace the servo drive.
A.300: regeneration failure	Set the regenerative resistor capacity (Pn600) to a value other than "0", but there is no external regenerative resistor	Check the connection of external regenerative resistor and the value of Pn600.	Connect an external regenerative resistor, or set Pn600 to 0 when no regenerative resistor is required.
	There is no external regenerative resistor, and the wiring of the power terminals B2-B3 of the servo drive are disconnected	Confirm the wiring of the power terminal jumper	Connect the jumper wiring correctly.
	The wiring of the external regenerative resistor is disconnected.	Check the wiring of the external regenerative resistor	Correctly wire the external regenerative resistor.
	Servo drive failure	—	If the control power supply is turned on again without the main circuit power supply being turned on, if the alarm still occurs, the servo drive may be faulty. Replace the servo drive.
A.320: Regeneration Error	The power supply voltage exceeds the specified range	Measuring power supply voltage	Set the power supply voltage within the specified range.
	The external regenerative resistance value or regenerative resistor capacity is too small, or there has been a continuous regeneration state	Check the operating conditions or the capacity	Change the regenerative resistance value or capacity. Reconsider the operating conditions
	There was a continuous regeneration state because a negative load was continuously applied.	Check the load applied to the servomotor during operation.	Reconsider the system including the servo, machine, and operating conditions
	The setting of Pn600 (Regenerative Resisto Capacity) is smaller than the capacity of the External Regenerative Resistor	Check to see if a Regenerative Resistor is connected and check the setting of Pn600	Correct the setting of Pn600.
	External regenerative resistor value is too large	Check if the regenerative resistor value is correct	Change it to the correct resistor value and capacitance.
	Servo drive failure	—	The servo drive may be faulty. Replace the servo drive.
A.330: Main circuit power wiring error * Detected when the main circuit power supply is turned on	The power supply voltage inside the servo drive is too high, and the regenerative resistor is disconnected	Measure the resistance value of the regenerative resistor with a measuring instrument	When using the built-in regenerative resistor of the servo drive, replace the servo drive. When using an external regenerative resistor, replace the regenerative resistor.
	DC power was supplie when an AC power supply input was specified in the settings	Confirm whether the power supply is DC power supply	Correct the power supply setting to match the actual power supply
	AC power was supplied when a DC power supply input was specified in the settings.	Check the power supply to see if it is an AC power supply.	Correct the power supply setting to match the actual power supply
	Set the regenerative resistor capacity (Pn600) to a value other than "0", but	Confirm the connection of the external regenerative resistor and the value of Pn600	Connect an external regenerative resistor, or set Pn600 to 0 when an external regenerative resistor is not required.

	there is no external regenerative resistor		
	The jumper wires of the servo power supply terminals B2-B3 of capacities other than the above are disconnected	Confirm the wiring of the power terminal jumper	Connect the jumper wires correctly.
	Servo drive failure	—	It may be that the servo drive is faulty. Replace the servo drive.
A.400: Overvoltage (Detected in the main circuit power supply section of the servo drive)	• The servo drive for AC200V, the AC power supply voltage is 290V or higher, or the servo drive for AC400V has detected a power supply voltage of AC580V or higher • The servo drive for AC200V, the DC power supply voltage is above 410V, and the servo drive for AC400V has detected a DC power supply voltage of 8 3 0V or more	Measuring supply voltage	Correct the AC/DC power supply voltage to within specified range..
	The power supply is unstable or has been affected by a lightning surge.	Measuring supply voltage	Improve the power supply condition, install a surge suppressor, etc., and turn on the power again. If the alarm still occurs, the servo drive may be faulty. Replace the servo drive.
	The voltage for AC power supply was too high during acceleration or deceleration	Check the power supply voltage and the speed and torque during operation	Set the AC power supply voltage within the specified range
	The external regenerative resistance is too high for the operating conditions.	Check the operating conditions and the regenerative resistance	Select a regenerative resistance value that is appropriate for the operating conditions an load
	The moment of inertia ratio or mass ratio exceeded the allowable value	Check to see if the moment of inertia ratio or mass ratio is within the allowable range	Increase the deceleration time, or reduce the load.
	Servo drive failure	—	If the control power supply is turned on again without the main circuit power supply being turned on, if the alarm still occurs, the servo drive may be faulty. Replace the servo drive.
A.410: Undervoltage (The undervoltage is detected by the main circuit power supply inside the servo drive)	For the AC200V servo drive, the AC power supply voltage is below 120V; for the AC400V servo drive, the AC power supply voltage is below 220V	Measuring powersupply voltage	Correct the power supply voltage to normal range.
	Power supply voltage drops during operation	Measuring powersupply voltage	Increase power supply capacity.
	A momentary power interruption occurred	Measuring powersupply voltage	If the momentary power failure holding time (Pn509) is changed, set it to a smaller value.
	The fuse of the servo drive is blown out.	—	Replace the servo drive and use the servo drive after connecting the reactor.
	Servo drive failure	—	It may be that the servo drive is faulty. Replace the servo drive.
A.450: Main circuit capacitor	Servo drive failure	—	Replace the servo drive.

overvoltage			
A.510: Overspeed (The motor speed above maximum speed	The order of phases U, V, and W in the motor wiring is not correct.	Confirm the wiring of the servo motor	Make sure that the Servomotor is correctly wired.
	A reference value that exceeded the overspee detection leve was input	Check the input reference.	Reduce the reference value. Or, adjust the gain
	Motor speed exceeds maximum speed	Confirm the waveform of the motor speed	Reduce the speed command input gain, adjust the servo gain, or adjust the operating conditions.
	Servo drive failure	—	It may be that the servo drive is faulty. Replace the servo drive.
A.511: Frequency division pulse output overspeed	The output frequency of frequency division pulse is too large, exceeding the limit value	Confirm the output setting of the division pulse	Reduce the setting of encoder frequency division pulse number (Pn212).
	The motor speed is too high, and the output frequency of the frequency division pulse exceeds the limit value	Confirm the output setting of the division pulse and the motor speed	Reduce motor speed.
A.520: vibration alert	Abnormal oscillation was detected in the motor speed	Check for abnormal motor noise, and check the speed and torque waveforms during operation	Reduce the motor speed. Or, reduce the setting of Pn100 (Speed Loop Gain).
	The moment of inertia ratio (Pn103) is larger than the actual value or has changed greatly	Check moment of inertia ratio	Correctly set the moment of inertia ratio (Pn103).
A.521: Autotuning Alarm (Vibration was detected while executing the custom tuning, Easy FFT, or the tuning-less function.)	The Servomotor vibrated considerably while performing the tuning-less function.	Check the waveform of the motor speed	Reduce the load so that the moment of inertia ratio is within the allowable value. Or increase the load level or reduce the rigidity level in the tuningless level settings.
	The Servomotor vibrated considerably while performing custom tuning or Easy FFT.	Check the waveform of the motor speed.	Check the operating procedure of corresponding function and implement corrections.
A.710: Instantaneous Overload A.720: Continuous Overload	The wiring is not correct or there is a faulty connection in the motor or encoder wiring.	Check the wiring.	Make sure that the Servomotor and encoder are correctly wired
	Operation was performed that exceeded the overload protection characteristics	Check the motor overloa characteristics and Run command	Reconsider the load and operating conditions. Or, increase the motor capacity
	An excessive load was applied during operation because the Servomotor was not driven due to mechanical problems	Check the operation reference and motor speed.	Correct the mechanical problem.
	Servo drive failure	—	It may be that the servo drive is faulty. Replace the servo drive.
A.730: A.731: Dynamic Brake	The Servomotor was rotated by an external force.	Check the operation status	Implement measures to ensure that the motor will not be rotated by an external force

Overload (An excessive power consumption by the dynamic brake was detected.)	Rotational energy at DB stop exceeds Capacity across DB resistor	to Check the power consumed by the DB resistor to see how frequently the DB is being used.	Consider the following ・Reduce the command speed of the servo motor. ・Reduce the moment of inertia ratio. ・Reduce the frequency of stopping with the dynamic brake
	Servo drive failure	—	It may be that the servo drive is faulty. Replace the servo drive.
A.740: Inrush Current Limiting Resistor Overload (The main circuit power supply was frequently turned ON and OFF.)	The allowable frequency of the inrush current limiting resistor was exceeded when the main circuit power supply was turned ON and OFF	—	Reduce the frequency of turning the main circuit power supply ON and OFF
	Servo drive failure	—	It may be that the servo drive is faulty. Replace the servo drive.
A.7A0: heatsink overheating (The heat sink temperature of the servo drive exceeds 100°C)	Ambient temperature is too high	Measure the ambient temperature with a thermometer	Improve the installation conditions of the servo drive and reduce the ambient temperature.
	An overload alarm was reset by turning OFF the power supply too many times	Check the alarm display to see if there is an overload alarm.	Change the reset method of the alarm.
	The load is too large, or the regeneration capacity is exceeded during operation	Use the accumulated load ratio to check the load during operation, and use the regenerative load ratio to check the regenerative processing capacity.	Reconsider the load and operating conditions.
	The installation direction of the servo drive and the distance from other servo drives are unreasonable	Confirm the installation status of the servo drive	Install according to the installation standard of the servo drive.
	Servo drive failure	—	It may be that the servo drive is faulty. Replace the servo drive.
A.7AB: Built-in Fan Stopped	The fan inside the servo drive stopped.	Check if a foreign object is inside the servo drive.	If the alarm still occurs after removing the foreign matter, the servo drive may be faulty. Replace the servo drive.
A.810: Encoder Backup Alarm (Detected at the encoder, but only when an absolute encoder is used.)	The power to the absolute encoder was turned ON for the first time	Check to see if the power supply was turned ON for the first time.	Set up the encoder. (Fn008).
	Reconnected after removing the encoder cable	Check to see if the power supply was turned ON for the first time.	Check the encoder connection and set up the encoder. (Fn008)
	Power is not being supplied both from the control power supply (+5 V) from the servo drive and from the battery power supply	Check the encoder connector battery and the connector status.	Replace the battery or implement similar measures to supply power to the encoder, and set up the encoder. (Fn008).
	Absolute encoder failure	—	If the alarm cannot be cleared even if the setting operation is performed again, replace the servo motor.
	Servo drive failure	—	It may be that the servo drive is faulty. Replace the servo drive.

A.820: Encoder Checksum Alarm (Detected at the encoder.)	Encoder failure	—	・In the case of an absolute encoder. If the encoder is set again (Fn008) and alarms still occur frequently, it may be that the servo is faulty. Replace the servo motor. ・In the case of a rotary absolute encoder or an incremental encoder, the servo motor may be faulty. Replace the servo motor. .
	Servo drive failure	—	It may be that the servo drive is faulty. Replace the servo drive.
A.830: Encoder Battery Alarm (The absolute encoder battery voltage was lower than the specified level.)	The battery connection is faulty or a battery is not connected.	Check the battery connection.	Correct the battery connection.
	The battery voltage is lower than the specified value (2.7 V).	Measure the voltage of the battery	Replace the battery.
	Servo drive failure	—	It may be that the servo drive is faulty. Replace the servo drive.
A.840: Encoder Data Alert * Detected on the encoder side	Encoder malfunction	—	Turn on the power again. If the alarm still occurs, the servo motor may be faulty. Replace the servo motor.
	Encoder malfunction due to interference such as noise	—	Correctly perform the wiring around the encoder. (Separation of the encoder cable and the main circuit cable of the servo motor, grounding treatment, etc.).
A.850: Encoder Overspeed (Detected at the encoder when the control power supply is turned ON.)	When the control power is turned on, the servo motor rotates at a speed of 200min-1 or more	Check the motor speed when the power supply is turned ON.	Reduce the Servomotor speed to a value less than 200 min-1, and turn ON the control power supply
	Encoder failure	—	Turn on the power again. If the alarm still occurs, the servo motor may be faulty. Replace the servo motor.
	Servo drive failure	—	Turn on the power again. If the alarm still occurs, the servo drive may be faulty. Replace the servo drive.
A.860: Encoder overheating * Only detected when an absolute encoder is connected * Detected on the encoder side	The ambient temperature of the servo motor is too high	Measure the ambient temperature of the servo motor	Reduce the ambient temperature of the servo motor to 40°C or less
	The Servomotor load is greater than the rated load	Use the accumulated load ratio to check the load.	Operate the Servo Drive so that the motor load remains within the specified range
	Encoder failure	—	Turn on the power again. If the alarm still occurs, the servo motor may be faulty. Replace the servo motor.
	Servo drive failure.	—	Turn on the power again. If the alarm still occurs, the servo drive may be faulty. Replace the servo drive.
A.8A0: External encoder error	Setting the origin of the absolute linear encoder failed because the motor moved	Before you set the origin, use the fully-closed feedback pulse counter to confirm that the motor is not moving	The motor must be stopped while setting the origin position.
	External encoder failure	—	Replace external encoder.
A.8A1: External encoder error	External encoder failure	—	Replace external encoder.
	Serial conversion unit failure	—	Replace the serial conversion unit.

A.8A2: External encoder sensor error (incremental)	External encoder failure	—	Replace external encoder.
A.8A3: External encoder position error (absolute value)	A failure occurred in the external absolute encoder.	—	The external absolute encoder may be faulty. Refer to the encoder manufacturer' instruction manual for corrections.
A.8A5: External Encoder Overspeed	An overspeed error was detected in the external encoder	Check the maximum speed of the external encoder.	Keep the external encoder below its maximum speed
A.8A6: External Encoder Overheated	An overheating error was detected in the external encoder.	—	Replace external encoder.
A.b10: Speed Reference A/D Error (Detected when the servo is turned ON.)	A malfunction occurred in the speed reference input section.	—	Reset the alarm and restart operation.
	Servo drive failure	—	Turn on the power again. If the alarm still occurs, the servo drive may be faulty. Replace the servo drive.
A.b11: Speed command A/D Conversi on data exception	A malfunction occurred in the speed reference input section.	—	Reset the alarm and restart operation..
	Servo drive failure	—	Turn on the power again. If the alarm still occurs, the servo drive may be faulty. Replace the servo drive.
A.b20: A.b20: Torque Reference A/D Error* Detected at servo-ON	A malfunction occurred in the reading section for the torque reference input	—	Reset the alarm and restart operation.
	Servo drive failure	—	Turn on the power again. If the alarm still occurs, the servo drive may be faulty. Replace the servo drive.
A.b31: Current detection error 1	U-phase current detection circuit failure	—	Turn on the power again. If the alarm still occurs, the servo drive may be faulty. Replace the servo drive.
A.b32: Current detection error 2	V-phase current detection circuit failure	—	Turn on the power again. If the alarm still occurs, the servo drive may be faulty. Replace the servo drive.
A.b33: Current detection error 3	Current detection circuit failure	—	Turn on the power again. If the alarm still occurs, the servo drive may be faulty. Replace the servo drive.
	The main circuit cable of the servo motor is disconnected	Check whether the main circuit cable of the servo motor is disconnected	Repair the motor cable.
A.bF0: System alarm 0	Servo drive failure	—	Turn on the power again. If the alarm still occurs, the servo drive may be faulty. Replace the servo drive.
A. bF1: System alarm 1	Servo drive failure	—	Turn on the power again. If the alarm still occurs, the servo drive may be faulty. Replace the servo drive.
A. bF2: System alarm 2	Servo drive failure	—	Turn on the power again. If the alarm still occurs, the servo drive may be faulty. Replace the servo drive.
A.bF3: System alarm 3	Servo drive failure	—	Turn on the power again. If the alarm still occurs, the servo drive may be faulty. Replace the servo drive.
A.bF4: System alarm 4	Servo drive failure	—	Turn on the power again. If the alarm still occurs, the servo drive may be faulty. Replace

			the servo drive.
A.C10: Servomotor Out of Control (Detected when the servo is turned ON.)	The order of phases U, V, and W in the motor wiring is not correct	Confirm the servo motor wiring	Make sure that the Servomotor is correctly wired
	Encoder failure	—	If the motor wiring is correct and the alarm still occurs after turning the power supply OFF and ON again, the Servomotor or linear encoder may be faulty. Replace the Servomotor or linear encoder
	Servo drive failure	—	Turn on the power again. If the alarm still occurs, the servo drive may be faulty. Replace the servo drive.
A.C80: Encoder Clear Error or Multiturn Limit Setting Error	Encoder failure	—	Turn on the power again. If the alarm still occurs, the servo motor may be faulty. Replace the servo motor.
	Servo drive failure	—	Turn on the power again. If the alarm still occurs, the servo drive may be faulty. Replace the servo drive
A.C90: Encoder Communications Error	There is a faulty contact in the connector or the connector is not wired correctly for the encoder	Check the condition of the encoder connector.	Reconnect the encoder connector and check the encoder wiring
	There is a cable disconnection or shortcircuit in the encoder. Or, the cable impedance is outside the specified values.	Check the condition of the encoder connector.	Use the Encoder Cable within the specified specifications.
	One of the following has occurred: corrosion caused by improper temperature, humidity, or gas, a short-circuit caused by entry of water drops or cutting oil, or faulty contact in connector caused by vibration.	Check the operating environment.	Improve the operating environment, and replace the cable. If the alarm still occurs, replace the servo drive.
	Malfunction due to noise interference.	—	Correct the wiring around the encoder by separating the Encoder Cable from the Servomotor Main Circuit Cable or by grounding the encoder.
	Servo drive failure	—	If the alarm does not occur when the control power is turned on after connecting the servo motor to another servo drive, the servo drive may be faulty. Replace the servo drive.
A.C91: Encoder Communications Position Data Acceleration Rate Error	Noise entered on the signal lines because the Encoder Cable is bent or the sheath is damaged	Check the condition of the Encoder Cable and connectors.	Check the Encoder Cable to see if it is installed correctly.
	The Encoder Cable is bundled with a highcurrent line or installed near a highcurrent line	Check the installation condition of the Encoder Cable	Confirm that there is no surge voltage on the Encoder Cable
	There is variation in the FG potential because of the influence of machines on	Check the installation condition of the Encoder Cable	Properly ground the machine to separate it from the FG of the encoder.

	the Servomotor side, such as a welder		
A.C92: Encoder Communications Timer Error	Noise entered on the signal line from the encoder.	—	Implement countermeasures against noise for the encoder wiring.
	Excessive vibration or shock was applied to the encoder	Check the operating conditions.	Reduce machine vibration. Correctly install the Servomotor or linea encoder
	Encoder failure	—	Turn on the power again. If the alarm still occurs, the servo motor may be faulty. Replace the servo motor.
	Servo drive failure	—	Turn on the power again. If the alarm still occurs, the servo drive may be faulty. Replace the servo drive.
A.CA0: Encoder Parameter Error	Encoder failure	—	Turn on the power again. If the alarm still occurs, the servo motor may be faulty. Replace the servo motor.
	Servo drive failure	—	Turn on the power again. If the alarm still occurs, the servo drive may be faulty. Replace the servo drive.
A. Cb0 Encoder Echoback Error	The encoder is wired incorrectly or there is faulty contact.	Check the wiring of the encoder.	Make sure that the encoder is correctly wired.
	The specifications of the Encoder Cable are not correct and noise entered on it.	—	Use a shielded twistedpair wire cable or a screened twisted-pair cable with conductors of at least 0.12 mm^2
	The Encoder Cable is too long and noise entered on it	—	The maximum wiring distance is 50m.
	There is variation in the FG potential because of the influence of machines on the Servomotor side, such as a welder	Check the condition of the Encoder Cable and connectors.	Properly ground the machine to separate it from the FG of the encoder
	Excessive vibration or shock was applied to the encoder.	Check the operating conditions	Reduce machine vibration. Correctly install the Servomotor or linear encoder
	Encoder failure	—	Turn on the power again. If the alarm still occurs, the servo motor may be faulty. Replace the servo motor.
	Servo drive failure	—	Turn on the power again. If the alarm still occurs, the servo drive may be faulty. Replace the servo drive.
A. CC0: Multiturn Limit Disagreement	When using a Direct Drive Servomotor, the setting of Pn205 (Multiturn Limit) does not agree with the encoder.	Check the setting of Pn205	Correct the setting of Pn205 (0 to 65,535).
	The multiturn limit of the encoder is different from that of the servo drive. Or, the multiturn limit of the servo drive has been changed.	Check the setting of Pn205 in the servo drive.	Change the setting if the alarm occurs.
	Servo drive failure	—	Turn on the power again. If the alarm still occurs, the servo drive may be faulty and

			replace the servo drive.
A.d00: Position Deviation Overflow (The setting of Pn520 (Position Deviation Overflow Alarm Level) was exceeded by the position deviation while the servo was ON.)	The Servomotor U, V, and W wiring is not correct.	Check the wiring of the Servomotor’ s Main Circuit Cables	Make sure that there are no faulty contacts in the wiring for the Servomotor and encoder
	Higher frequency of position commands Acceleration of position command is too large	Try to reduce the command pulse frequency and then try operating servo drive.	Reduce the position reference pulse frequency or the reference acceleration rate, or reconsider the electronic gear ratio
		Try to reduce the command acceleration before running	Apply smoothing, i.e., by using Pn216 (Position Reference Acceleration/Deceleration Time Constant).
	The setting of Pn520 (Position Deviation Overflow Alarm Level) is too low for thev operating conditions.	Check Pn520 (Position Deviation Overflow Alarm Level) to see if it is set to an appropriate value	Correctly set Pn520.
	Servo drive failure	—	Turn on the power again. If the alarm still occurs, the servo drive may be faulty. Replace the servo drive.
A.d01: Position Deviation Overflow Alarm at Servo-ON	The servo was turned ON after the position deviation exceeded the setting of Pn526 while the servo was OFF	Check the position deviation while the servo is OFF.	Set the position deviation to be cleared while the servo is OFF. Optimize the setting of Pn526 (Position Deviation Overflow Alarm Level at Servo ON).
A.d02: Position Deviation Overflow Alarm for Speed Limit at Servo ON	If position deviation remains in the deviation counter, the setting of Pn529 or Pn584 (Speed Limit Level at Servo ON) limits the speed when the servo is turned ON. This alarm occurs if reference pulses are input and the setting of Pn520 (Position Deviation Overflow Alarm Level) is exceeded	—	Set the position deviation to be cleared while the servo is OFF. Optimize the setting of Pn520 (Position Deviation Overflow Alarm Level). Or, adjust the setting of Pn529 or Pn584 (Speed Limit Level at Servo ON)
A.d10: Motor-Load Position Deviation Overflow	The motor direction and external encoder installation orientation are backward.	Check the motor direction and the external encoder installation orientation.	Install the external encoder in the opposite direction, or change the setting of Pn002 (External Encoder Usage) to reverse the direction.
	There is an error in the connection between the load (e.g., stage) and external encoder coupling	Check the coupling of the external encoder	Check the mechanical coupling.
A.Eb1: Safety Function Signal Input Timing Error	The delay between activation of the /HWBB1 and /HWBB2 input signals for the HWBB was ten second or longer.	Measure the time delay between the /HWBB1 and /HWBB2 signals.	The output signal circuits or devices for /HWBB1 and /HWBB2 or the servo drive input signal circuits may be faulty. Alternatively, the input signal cables may be disconnected. Check to see if any of these items are faulty or have been disconnected.
A.F10: Power Supply Line Open Phase (The voltage was low for more than one second for phase R, S, or T when the main power supply	The three-phase power supply wiring is not correct.	Check the power supply wiring.	Make sure that the power supply is correctly wired.
	The three-phase power supply is unbalanced.	Measure the voltage for each phase of the three-phase power supply.	Balance the power supply by changing phases.
	A single-phase power supply was input without specifying a single-phase AC power supply input	Check the power supply and the parameter setting	Match the parameter setting to the powe supply.

was ON.)	(Pn00B.2 = 1)		
	Servo drive failure	—	Turn on the power again. If the alarm still occurs, the servo drive may be faulty. Replace the servo drive.
A .F26	The torque command reaches the maximum value	—	Correctly connect the U VW power cable of the servo motor.
FL-1 *2: System Alarm	Servo drive failure	—	Turn on the power again. If the alarm still occurs, the servo drive may be faulty. Replace the servo drive.
FL-2 *2: System Alarm	Servo drive failure	—	

Note: * 2. The alarm is not saved to the records. Displayed only on the panel..

10.2 Warning Display

This section explains how to deal with warnings.

This section provides a list of warnings and the causes of and corrections for warnings.

10.2.1 Warning List

The list of warnings is as follows :

Table 10-4 List of warnings

Warning No.	Warning name	Content
A.900	Position Deviation Overflow	The position deviation exceeded the percentage set with the following formula: $\frac{\mathbf{Pn520 \times Pn51E}}{\mathbf{100}}$.
A.901	Position Deviation Overflow Alarm at Servo ON	The position deviation when the servo was turned ON exceeded the percentage set with the following formula: $\frac{\mathbf{Pn520 \times Pn51E}}{\mathbf{100}}$.
A.910	Overload	This warning occurs before an overload alarm (A.710 or A.720) occurs. If the warning is ignored and operation is continued, an alarm may occur
A.911	Vibration	Abnormal vibration was detected during motor operation. The detection level is the same as A.520. Set whether to output an alarm or a warning by setting Pn310 (Vibration Detection Selection).
A.920	Regenerative Overload	This warning occurs before an A.320 alarm (Regenerative Overload) occurs. If the warning is ignored and operation is continued, an alarm may occur
A.921	Dynamic Brake Overload	This warning occurs before an A.731 alarm (Dynamic Brake Overload) occurs. If the warning is ignored and operation is continued, an alarm may occur
A.930	Absolute Encoder Battery Error	This warning occurs when the voltage of absolute encoder’ s battery is low.
A.941	Change of Parameters Requires Restart	Parameters have been changed that require the power supply to be turned OFF and ON again
A.971	Undervoltage	This warning occurs before an A.410 alarm (Undervoltage) occurs. If the warning is ignored and operation is continued, an alarm may occur
A.9A0	Overtravel	Overtravel was detected while the servo was ON.
A.9B5	Current Loop Status Warning	Torque limit too small, less than 30%
A.9B7 _	Inappropriate servo enable condition	When the hardware base is not blocked, some conditions are not met and cannot be enabled

Note: 1. If it is not set to "Output Alarm Code and Warning Code (Pn001.3 = 1)", then no warning code will be output .

2. If it is set to " No Warning (Pn008.2 = 1)" , warnings other than undervoltage warning (A.971) will not be detected .

10.2.2 Causes of Warnings and Troubleshooting

The following table lists the causes of the warnings and the troubleshooting. If the error still cannot be eliminated after handling according to the table below, please contact the agent or our company.

Table 10-5 Warning causes and troubleshooting

Warning No.: Warning Name	Cause	Confirmation method	Correction
A.900: Position Deviation Overflow	The Servomotor U, V, and W wiring is not correct.	Check the wiring of the Servomotor' s Main Circuit Cables.	Make sure that there are no faulty connections in the wiring for the Servomotor and encoder
	The gain of the servo drive is too low	Check the gains of the servo drive	ncrease the servo gain, e.g., by using autotuning without a host reference.
	The frequency of the position reference pulse is too high	Reduce the reference pulse frequency and try operating the servo drive.	Reduce the position reference pulse frequency or the reference acceleration rate, or reconsider the electronic gear ratio
	The acceleration of the position reference is too high	Reduce the reference acceleration and try operating the servo drive.	Apply smoothing, i.e., by using Pn216 (Position Reference Acceleration/ Deceleration Time Constant).
	Relative to the operating conditions, the position deviation excessive alarm value (Pn520) is low	Check if position deviation excessive alarm value(Pn520) is appropriate	Set correctlyPn520 value.
	Servo drive failure	—	Turn on the power again. If the alarm still occurs, the servo drive may be faulty. Replace the servo drive .
A.901: Position Deviation Overflow Alarm at Servo ON	The position deviation when the servo was turned ON exceeded the percentage set with the following formula: $\frac{Pn520 \times Pn51E}{100}$	—	Set the position deviation to be cleared while the servo is OFF. Optimize the setting of Pn528 (Position Deviation Overflow Warning Level at Servo ON)
A.910: Overload (warning before an A.710 or A.720 alarm occurs)	The wiring is not correct or there is a faulty connection in the motor or encoder wiring	Check the wiring	Make sure that the Servomotor and encoder are correctly wired.
	Operation was performed that exceeded the overload protection characteristics.	Check the motor overload characteristics and Run command.	Reconsider the load and operating conditions. Or, increase the motor capacity
	An excessive load was applied during operation because the Servomotor was not driven because of mechanical problems	Check the operation reference and motor speed.	Remove the mechanical problem
	Servo drive failure	—	It may be that the servo drive is faulty. Replace the servo drive .
A.911: Vibration	Abnormal vibration was detected during motor operation	Check for abnormal motor noise, and check the speed and torque waveforms during operation	Reduce the motor speed. Or, reduce the servo gain with custom tuning.
	The setting of Pn103 (Moment of Inertia Ratio) is greater than the actual moment of inertia or was greatly changed.	Check the moment of inertia ratio or mass ratio.	Set Pn103 (Moment of Inertia Ratio) to an appropriate value.

A.920: Regenerative Overload (warning before an A.320 alarm occurs	The power supply voltage exceeded the specified range	Measure the power supply voltage.	Set the power supply voltage within the specified range.
	There is insufficient external regenerative resistance, regenerative resistor capacity, or servo drive capacity, or therehas been a continuous regeneration state	Check the operating conditions or the capacity using the software HCServoWorks ,etc.	Change the regenerative resistance value, regenerative resistance capacity, or Servo drive capacity. Reconsider the operating conditions using the HCServoWorks
	There was a continuous regeneration state because a negative load was continuously applied	Check the load applied to the Servomotor during operation.	Reconsider the system including the servo, machine, and operating conditions.
A.921: Dynamic Brake Overload (warning before an A.731 alarm occurs)	The servo motor is driven by external force	Check the running status	Do not drive the servo motor with external force .
	The rotational energy when the DB stops exceeds the capacity of the DB resistor	Check the power consumed by the DB resistor to see how frequently the DB is being used.	Reconsider the following: • Reduce the Servomotor command speed. • Decrease the moment of inertia or mass. • Reduce the frequency of stopping with the dynamic brake.
A.921: Dynamic Brake Overload (warning before an A.731 alarm occurs)	Servo drive failure	—	It may be that the servo drive is faulty. Replace the servo drive .
A.930: Absolute Encoder Battery Error (The absolute encoder battery voltage was lower than the specified level.) (Detected only when an absolute encoder is connected.	Incorrect battery connection or not connected	Check the battery connection	Correct the battery connection
	The battery voltage is lower than the specified value (2.7 V)	Measure the voltage of the battery	Replace the battery .
	Servo drive failure	—	It may be that the servo drive is faulty . Replace the servo drive .
A.941: Change of Parameters Requires Restart	Parameters have been changed that require the power supply to be turned OFF and ON again	—	Turn the power supply to the servo drive OFF and ON again.
A.971: Undervoltage	For 200V Servo drive, AC supply voltage at140V or less; For 400VServo drive, AC supply voltage at 280V or less	Measuring supply voltage	Set the power supply voltage to normal range .
	The power supply voltage dropped during operation	Measuring supply voltage	Increase power supply capacity .
	A momentary power interruption	Measuring supply voltage	If you have changed the setting of Pn509 (Momentary Power Interruption Hold Time),

	occurred.		decrease the setting
	The fuse of the servo drive is blown out	—	Replace the servo drive and use the servo drive after connecting the reactor .
	Servo drive failure	—	It may be that the servo drive is faulty . Replace the servo drive .
A.9A0: Overtravel (Overtravel status detected)	Overtravel was detected while the servo was ON.	Check the status of the overtravel signals on the input signal monitor	Even if an overtravel signal is not shown by the input signal monitor, momentary overtravel may have been detected. Take the following precautions. • Do not specify movements that would cause overtravel from the host controller. • Check the wiring of the overtravel signals. • Implement countermeasures against noise
A.9B7 : _ The servo’s enabled condition not met	Main circuit power supply error	Check the wiring of the main circuit power cable	Check whether the main circuit power supply is connected correctly, whether it is powered on normally, and whether the bus voltage is normal
	When using an absolute value motor SEN signal is not connected	Check the wiring of the SEN signal	Check the wiring of the SEN signal

10.3 Causes and Troubleshooting Based on the Opeation and Conditions

This section provides troubleshooting based on the operation and conditions of the Servomotor, including causes and corrections.

Table 10-6 Causes and troubleshooting

Problem	Cause	Confirmation method	Correction
Servo motor does not start	Control power is not connected	Measure the voltage between control power supply terminals.	Correct the wiring so that the control power supply is turned ON
	The main circuit power is not turned ON.	Measure the voltage between the main circuit power input terminals.	Correct the wiring so that the main circuit power supply is turned ON.
	The I/O signal connector (CN1) pins are not wired correctly or are disconnected.	Turn OFF the power supply to the servo system. Check the wiring condition of the I/O signal connector (CN1) pins.	Correct the wiring of the I/O signal connector (CN1) pins.
	The wiring of the main circuit cable and encoder cable of the servo motor is disconnected	Check the wiring conditions.	Wire the cable correctly.
	There is an overload on the Servomotor.	Operate the Servomotor with no load and check the load status	Reduce the load or replace the Servomotor with a Servomotor with a larger capacity.
	The type of encoder that is being used does not agree with the setting of Pn002.2.	Check the type of the encoder that is being used and the setting of Pn002.2.	Set Pn002.2 . according to the type of the encoder that is being used.
	No speed entered/position command	Check the allocation status of the input signals	Allocate an input signal so that the speed and position references are input correctly
	Input signal(Pn50A~Pn50D) is assigned incorrectly	Check the input signal allocations (Pn50A~Pn50D)	Correctly allocate the input signals (Pn50A~ Pn50D).
	The /S-ON (Servo ON) signal is OFF	Check Pn50A.0, Pn50A.1settings	Set correctlyPn50A.0, Pn50A.1, and turn on /S-ON.
	/P-CONInput function setting error	Check the setting of Pn000.1.	Set correctly according to the purpose of the function .

	The SEN input is OFF.	Check the ON/OFF status of the SEN input.	If you are using an absolute encoder, turn ON the SEN signal.
	The reference pulse mode selection is not correct.	Check Pn200.0setting and the reference pulse form	Set Pn200.0so that is agrees with the reference pulse form.
	Speed control: The speed reference input is not appropriate.	Check between the speed reference input (VREF) and signal ground (SG) to see if the control method and the input agree.	Correctly set the control method and input method
	Torque control: The torque reference input is not appropriate	Check between the torque reference input (TREF) and signal ground (SG) to see if the control method and the input agree.	Correctly set the control method and input method
	Position control: The reference pulse input is not appropriate.	Check Pn200.0and the sign and pulse signals	Correctly set the control method and input method
	The /CLR (Position Deviation Clear) input signal has not been turned OFF	Check /CLRinput signal(CN1-14, 15)	Turn OFF the /CLR signal.
	The P-OT (Forward Drive Prohibit) or N-OT (Reverse Drive Prohibit) signal is still OFF.	Check the P-OT and NOT signals.	Turn ON the P-OT and N-OT signals.
	The safety input signals (/HWBB1 or /HWBB2) were not turned ON	Check the /HWBB1 and /HWBB2 input signals	Turn ON the /HWBB1 and /HWBB2 input signals. If you are not using the safety function, connect the Safety Jumper Connector (provided as an accessory) to CN8
	Servo drive failure	-	Replace the servo drive .
Servomotor Moves Instantaneously, and Then Stops	Servo motor wiring error	Check the wiring	Make the wiring correctly .
	Encoder wiring error	Check the wiring	Make the wiring correctly .
Servomotor Speed Is Unstable	There is a faulty connection in the Servomotor wiring.	The connector connections for the power line (U, V, and W phases) and the encoder or Serial Converter Unit may be Unstable. Check the wiring.	Tighten any loose terminals or connectors and correct the wiring
Servomotor Moves without a Reference Input	Speed control: The speed reference input is not appropriate.	Check between the torque reference input (TREF) and signal ground (SG) to see if the control method and the input agree..	Correctly set the control method and input method.
	Torque control: The torque reference input is not appropriate	Check whether the control mode is consistent with the input between V-REF and SG	Correctly set the control method and input method.
	The speed reference offset is not correct	Theservo drive offset is adjusted incorrectly.	Adjust the offset of the servo drive .
	Position control: The reference pulse input is not appropriate	Check the command pulse form and sign + pulse signal of Pn200.0	Correctly set the control method and input method
	Servo drive failure	—	Replace the servo drive .
Dynamic brake (DB) does not operate	The setting value of parameter Pn001.0 is incorrect.	Check the setting value of parameter Pn001.0.	Set Pn001.0 correctly. .
	DB resistor disconnected	Check the moment of inertia, motor speed, and dynamic brake frequency of use. If the moment of inertia, motor speed, or dynamic brake frequency of use is excessive, the dynamic brake resistance may be disconnected	Replace the servo drive. To prevent disconnection, reduce the load
	There was a failure in the dynamic brake drive circuit	-	There is a defective component in the dynamic brake circuit.

			Turn OFF the power supply to the servo system.Replace the servo drive .
Abnormal noise from servo motor	The Servomotor vibrated considerably while using the Tuning-less function (factory setting)	Check the waveform of the motor speed.	Reduce the load so that it is below the allowable moment of inertia ratio, or increase the load value of the Tuning-less value setting (Fn200), or reduce the rigidity value .
	The machine mounting is not secure.	Check the installation status of the servo motor	Tighten the mounting screws
		Check to see if there is misalignment in the coupling	Align the coupling
		Check to see if the coupling is balanced	Balance the coupling.
	Failure in bearing	Check for noise and vibration around the bearings.	Replace the servo motor .
	Vibration comes from the driven machine	Check for any foreign matter, damage, or deformation in the machine’ s moving parts	Consult with the machine manufacturer.
	Noise interference occurred because of incorrect I/O signal cable specifications.	Check the I/O signal cables to see if they satisfy specifications. Use shielded twisted-pair cables or screened twisted-pair cables with conductors of at least 0.12 mm^2 (stranded wire)	Use cables that satisfy the specifications
	Noise interference occurred because an I/O signal cable is too long	Check the length of the I/O signal cable	The I/O signal cables must be no longer than 3 m
	Noise interference occurred because of incorrect Encoder Cable specifications.	Check the Encoder Cable to see if it satisfies specifications. Use shielded twisted-pair cables or screened twisted-pair cables with conductors of at least 0.12 mm^2 (stranded wire)	Use cables that satisfy the specifications
	Noise interference occurred because the Encoder Cable is too long.	Check the length of the Encoder Cable	Set the length of the encoder cable to 50m max..
	Noise interference occurred because the Encoder Cable is damaged	Check the Encoder Cable to see if it is pinched o the sheath is damaged.	Replace the Encoder Cable and correct the cable installation environment.
	The Encoder Cable was subjected to excessive noise interference	Check to see if the Encoder Cable is bundled with a high-current line or installed near a high-current line.	Correct the cable layout so that no surge is applied by high-current lines.
	There is variation in the FG potential because of the influence of machines on the Servomotor side, such as a welder	Check to see if the machines are correctly grounded.	Properly ground the machines to separate them from the FG of the encoder
	There is a pulse counting error due to noise	Check to see if there is noise interference on the signal line from the encoder	Implement countermeasures against noise for the encoder wiring.
	The encoder was subjected to excessive vibration or shock	Check to see if vibration from the machine occurred. Check the Servomoto installation (mounting surface precision, securing state, and alignment). Check the linear encoder installation (mounting surface precision and securing method)	Reduce machine vibration. Improve the mounting state of the Servomotor or linear encoder.
	Encoder failure	—	Replace the servo motor .

Servomotor Vibrates at Frequency of Approx. 200 to 400Hz.	The servo gains are not balanced.	Check to see if the servo gains have been correctly tuned	Perform autotuning without a host reference.
	The setting of Pn100 (Speed Loop Gain) is too high.	Check the speed loop gain(Pn100) setting The factory setting: Kv = 40.0Hz	Set the correct speed loop gain (Pn100). .
	The setting of Pn102 (Position Loop Gain) is too high.	Check position loop gain(Pn102) setting value factory setting: Kp = 40.0/s	Set the correct setting value of position loop gain (Pn102) .
	The setting of Pn101 (Speed Loop Integral Time Constant) is not appropriate	Check the setting value of the speed loop integral time constant (Pn101) Factory setting: Ti = 20.0ms	Set the correct speed loop integral time constant (Pn101) . .
	Moment of inertia ratio(Pn103) setting value is incorrect	Check the moment of inertia ratio(Pn103) setting value	Set the correct moment of inertia ratio (Pn103) . .
Large Motor Speed Overshoot on Starting and Stopping	The servo gains are not balanced.	Check to see if the servo gains have been correctly tuned	Perform autotuning without a host reference..
	The setting of Pn100 (Speed Loop Gain) is too high.	Check the speed loop gain(Pn100) setting The Factory setting: Kv = 40.0Hz	Set the correct speed loop gain (Pn100)..
	Position loop gain(Pn102) setting value is too high	Check position loop gain(Pn102) setting The Factory setting: Kp = 40.0/s	Set the correct setting value of position loop gain (Pn102) .
	The setting of Pn101 (Speed Loop Integral Time Constant) is not appropriate.	Check the setting value of the speed loop integral time constant (Pn101). The Factory setting: Ti = 20.0ms	Set the correct speed loop integral time constant(Pn101)..
	The setting of Pn103 (Moment of Inertia Ratio or Mass Ratio) is not appropriate	Check moment of inertia ratio(Pn103) .	Set the correct moment of inertia ratio (Pn103). .
Absolute Encoder Position Deviation Error (The position that was saved in the host controller when the power was turned OFF is different from the position when the power was next turned ON.)	Noise interference occurred because of incorrect Encoder Cable specifications	Check the Encoder Cable to see if it satisfies specifications. Use shielded twisted-pair cables or screened twisted-pair cables with conductors of at least 0.12 mm^2 (stranded wire).	Use cables that satisfy the specifications.
	Noise interference occurred because the Encoder Cable is too long	Check the length of the encoder cable	Set the length of the encoder cable within 50 m .
	Noise interference occurs due to damaged encoder cable	Check whether the encoder cable is clamped or the sheath is damaged	Replace the encoder cable and change the laying environment of the encoder cable .
	Excessive noise interference on the encoder cable	Check whether the encoder cable is bundled with high- current wires or is too close	Change the environment where the encoder cable is laid so that it is not affected by the surge voltage of the high-current wire .
	There is variation in the FG potential because of the influence of machines on the Servomotor side, such as a welder.	Check to see if the machines are correctly grounded	Properly ground the machines to separate them from the FG of the encoder.
	The pulse counting error of the servo drive due to noise interference	Check to see if there is noise interference on the I/O signal line from the encoder or Serial Converter Unit	Implement countermeasures against noise for the encoder or Serial Converter Unit wiring
	The encoder is affected by excessive vibration and shock	Check whether mechanical vibration occurs, and confirm the installation status of the servo motor(Accuracy of mounting surface and securing method)	Reduce machine vibration. Improve the mounting state of the Servomotor or linear encoder
	Encoder failure	—	Replace the servo motor .
	Servo drive failure	—	Replace the servo drive .
	Host Controller Multiturn Data or Absolute Encoder Position Data Reading Error	Check the error detection part of the host controller	Correct the error detection section of the host controller
		Check to see if the host controller is	Perform parity checks for the

		executing data parity checks	multiturn data or absolute encoder position data.
		Check for noise interference in the cable between the servo drive and the host controller.	Implement countermeasures against noise and then perform parity checks again for the multiturn data or absolute encoder position data
Overtravel Occurred	Forward Drive Prohibit or Reverse Drive Prohibit signal was input.	Check the voltage of the external power supply (+24V) for the input signal	Correct the external power supply (+24 V) voltage for the input signals.
		Check the operating condition of the overtravel limit switches. limit switch	Make sure that the overtravel limit switches operate correctly .
		Check the wiring of the overtravel limit switches.	Correct the wiring of the overtravel limit
		Check the settings of the overtravel input signal allocations (Pn50A/ Pn50B).	Set the parameters to correct values.
	Forward Drive Prohibit or Reverse Drive Prohibit signal malfunctioned.	Check for fluctuation in the external power supply(+24 V) voltage for the input signals.	Eliminate fluctuation from the external power supply (+24 V) voltage for the input signals
		Check to see if the operation of the overtravel limit switches is unstable.	Stabilize the operating condition of the overtravel limit switches
		Check the wiring of the overtravel limit switches (e.g., check for cable damage and loose screws)	Correct the wiring of the overtravel limit switches.
	There is a mistake in the allocation of the Forward Drive Prohibit or Reverse Drive Prohibit signal (Pn50A.3, Pn50B.0)	Check whether the P-OT signal is assigned to Pn50A.3	If other signals are assigned to Pn50A.3, reassign the P-OT signal to this parameter .
		Check whether the N-OT signal is assigned to Pn50B.0	If other signals are assigned to Pn50B.0, reassign N-OT signal to this parameter .
	The selection of the Servomotor stopping method is not correct	Check Pn001.0 and Pn001.1 at servo OFF	Select a servo motor stopping method other than coast to stop .
		Check Pn001.0 and Pn001.1 in torque control	Select a servo motor stopping method other than coast to stop .
Improper Stop Position for Overtravel (OT) Signal	The limit switch position and dog length are not appropriate.	—	Install the limit switch at the appropriate position.
	The overtravel limit switch position is too close for the coasting distance.	—	Install the overtravel limit switch at the appropriate position.
Position Deviation (without Alarm)	Noise interference occurred due to incorrect specifications of the encoder cable	Check the Encoder Cable to see if it satisfies specifications. Use shielded twisted-pair cables or screened twisted-pair cables with conductors of at least 0.12 mm^2 (stranded wire)	Use cables that satisfy the specifications.
	Noise interference occurred because the Encoder Cable is too long.	Check the length of the encoder cable	Set the length of the encoder cable within 50m .
	Noise interference occurs due to damaged encoder cable	Check whether the encoder cable is clamped or the sheath is damaged	Replace the encoder cable and change the laying environment of the encoder cable .
	The Encoder Cable was subjected to excessive noise interference	Check to see if the Encoder Cable is bundled with a high-current line or installed near a high-current line	Correct the cable layout so that no surge is applied by high-current lines.

	There is variation in the FG potential because of the influence of machines on the Servomotor side, such as a welder	Check to see if the machines are correctly grounded	Properly ground the machines to separate them from the FG of the encoder.
	The pulse counting error of the servo drive due to noise interference	Check to see if there is noise interference on the I/O signal line from the encoder or Serial Converter Unit.	Implement countermeasures against noise for the encoder wiring or Serial Converter Unit wiring.
	The encoder was subjected to excessive vibration or shock	Check the Servomotor installation (mounting surface precision, securing state, and alignment). Check the linear encoder installation (mounting surface precision and securing method).	Reduce machine vibration. Improve the mounting state of the Servomotor or linear encoder.
	The coupling between the machine and Servomotor is not suitable	Check to see if position offset occurs at the coupling between machine and Servomotor	Correctly secure the coupling between the machine and Servomotor.
	Noise interference occurred because of incorrect I/O signal cable specifications	Check the I/O signal cables to see if they satisfy specifications. Use shielded twisted-pair cables or screened twisted-pair cables with conductors of at least 0.12 mm^2 (stranded wire).	Use cables that satisfy the specifications.
	If reference pulse input multiplication switching is being used, noise may be causing the I/O signals used for this function (/PSEL and /PSELA) to be falsely detected.	Check the I/O signal cables to see if they satisfy specifications. Use shielded twisted-pair cables or screened twisted-pair cables with conductors of at least 0.12 mm^2 (stranded wire)	Use cables that meet the specifications .
	Pulses are being lost because the filter for the referenc pulse input is not appropriate.	Check the length of the I/O signal cable	The I/O signal cables must be no longer than 3 m
	Encoder failure (The pulse does not change)	-	Replace the servo motor .
	Servo drive failure	-	Replace the servo drive .
Servo motor overheating	The surrounding air temperature is too high.	Measure the surrounding air temperature around the Servomotor	Reduce the surrounding air temperature to 40°C or less..
	The surface of the servo motor is dirty	Visually check the surface for dirt.	Remove dirt, dust, oil, etc. on the surface of the servo motor .
	There is an overload on the servomotor.	Check the load status with a monitor.	Correct the settings for the polarity detectionrelated parameters.

Chapter 11 Auxiliary Functions and Parameter List

Chapter 11 Auxiliary Functions and Parameter List 239
11.1 Auxiliary Function List 240
11.2 Parameter List 241

11.1 Auxiliary Function List

Table11-1 Auxiliary function list

Fn No.	Function	By operation panel	By HCServoWorks	Reference chapter
Fn000	Display Alarm History	1	1	7.2
Fn002	JOG	1	1	7.3
Fn003	Origin search	1	1	7.4
Fn004	JOG Program	1	1	7.5
Fn005	Initialize Parameters	1	1	7.6
Fn006	Clear Alarm History	1	1	7.7
Fn008	Reset Absolute Encoder(initialization) and Encoder Alarm Reset	1	1	—
Fn009	Auto Tuning Analog (Speed/Torque) Command Offset	1	1	—
Fn00A	Manual Adjustment of Speed Command Offset	1	1	—
Fn00B	Manual Adjustment of Torque Command Offset	1	1	—
Fn00C	Adjust Analog Monitor Output Offset	1	1	7.8
Fn00D	Adjust Analog Monitor Output Gain	1	1	7.9
Fn00E	Auto Tuning Motor Current Detection Signal Offset	1	1	7.10
Fn00F	Manually Adjust Motor Current Detection Signal Offset	1	1	7.11
Fn010	Write Prohibition Setting	1	0	7.12
Fn011	Display Servomotor Model	1	1	7.13
Fn012	Display Software Version	1	1	7.14
Fn013	Multiturn Limit Setting after Multiturn Limit Disagreement Alarm	1	1	—
Fn01B	Initialize Vibration Detection Level	1	1	7.15
Fn030	Software Reset	1	1	7.16
Fn200	Tuning-less Level Setting	1	1	6.2.2
Fn201	Advanced Autotuning without Reference	0	1	6.3
Fn202	Advanced Autotuning with Reference	0	1	6.4
Fn203	One-Parameter Tuning	1	1	6.5
Fn204	Adjust Anti-resonance Control	0	1	6.7
Fn205	Vibration Suppression	0	1	6.8
Fn206	Easy FFT	1	1	—
Fn207	Online Vibration Monitoring	1	1	—

1 : Operable 0 : Not operable

Note: When performing auxiliary functions, be sure to use the panel or HCServoWorks for Y7 series servo drive. If an auxiliary function will be performed at the same time, "no_oP" or "NO-OP" will be displayed

PRM No.	Name	Setting range	Unit	Default	When enabled	Classification	Reference
Pn000	Basic Function Selections 0	0000 ～ 00B3	—	0010	After restart	Setup	—

n.□□□□

Rotation Direction Selection		Reference
0	Use CCW as the forward direction.	5.3.4
1	Use CW as the forward direction.(Reverse Rotation Mode)	
2-3	Reserved parameter	

Control Method Selection		Reference
0	Speed control with analog command	5.3.2
1	Position control with pulse train command	
2	Torque control with analog command	
3	Internal set speed control with contact command	
4	Internal set speed control with contact command ↔ Speed control with analog command	
5	Internal set speed control with contact command ↔ Position control with pulse train command	
6	Internal set speed control with contact command ↔ Torque control with analog command	
7	Position control with pulse train command ↔ Speed control with analog command	
8	Position control with pulse train command ↔ Torque control with analog command	
9	Torque control with analog command ↔ Speed control with analog command	
A	Speed control with analog command ↔ Speed control with zero clamping	
B	Position control with pulse train command ↔ Position control with command pulse inhibition	

Reserved parameter (Do not change.)

Reserved parameter (Do not change.)

PRM No.	Name	Setting range	Unit	Default	When enabled	Classification	Reference
Pn001	Basic Function Selections 1	0000 ～ 1122	—	0001	After restart	Setup	—

n.□□□□

Stopping Method at Servo OFF and BM.1 Alarms		Reference
0	Stop the motor by applying the dynamic brake	5.3.7
1	Stop by applying dynamic brake and then release the dynamic brake	
2	Coast the motor to a stop without the dynamic brake	

Overtravel Stopping Method		Reference
0	DB or coast the motor to stop (stopping method same as Pn001.0)	5.3.5
1	Decelerate the motor to a stop using the torque set in Pn406 as the maximum torque and then servo-lock the motor	
2	Decelerate the motor to a stop using the torque set in Pn406 as the maximum torque and then let the motor coast	

Main Circuit Power Supply AC/DC Input Selection		Reference
0	AC power input: From L1, L2, and L3 terminals	5.3.1
1	DC power input: Directly input DC power from B1, N terminal or directly input DC power from P, N terminal	

Warning Code Output Selection		Reference
0	Output only alarm codes on the ALO1, ALO2, and ALO3 terminals.	5.14.3
1	Output both warning codes and alarm codes on the ALO1, ALO2, and ALO3 terminals. However, while an warning code is being output, the ALM (Servo Alarm) output signal will remain ON (normal state).	

Pn002	Basic Function Selections 2	0000 ～ 4113	—	0000	After restart	Setup	—

n.□□□□

Speed/Position Control Option (T-REF Input Allocation)		Reference
0	Do not use T-REF	—
1	Use T-REF as an external torque limit input.	5.9.3
2	Use T-REF as a torque feedback input	6.8.2
3	Use T-REF as an external torque limit input when /P-CL or /N-CL is ON.	5.9.3

Torque Control Option (V-REF Input Allocation)		Reference
0	Do not use V-REF.	5.6.5
1	Use V-REF as an external speed limit input.	

Absolute Encoder Usage		Reference
0	Use the absolute encoder according to encoder specifications.	5.11
1	Use the absolute encoder as an incremental encoder	

External Encoder Usage		Reference
0	Do not use an external encoder.	9.2
1	The external encoder moves in the forward direction for CCW motor rotation.	
2	Reserved setting (Do not change.)	
3	The external encoder moves in the reverse direction for CCW motor rotation.	
4	Reserved setting (Do not change.)	

PRM No.	Name	Setting range	Unit	Default	When enabled	Classification	Reference
Pn006	Application Function Selections 6	0000 ～ 005F	—	0002	Immediately	Setup	—

n.□□□□

Analog Monitor 1 Signal Selection		Reference
00	Motor speed（1V/1000min^{-1}）	—
01	Speed command（1V/1000min^{-1}）	
02	Torque command（1 V/100% rated torque）	
03	Position deviation (0.05 V/command unit)	
04	Position amplifier deviation (after electronic gear) (0.05 V/encoder pulse unit)	
05	Position command speed（1V/1000min^{-1}）	
06	Reserved setting (Do not use.)	
07	Load-motor position deviation (0.01 V/command unit)	
08	Positioning completion (positioning completed: 5 V, positioning not completed: 0 V)	
09	Speed feedforward（1V/1000min^{-1}）	
0A	Torque feedforward（1 V/100% rated torque）	
0B	Active gain (1st gain: 1 V, 2nd gain: 2 V)	
0C	Completion of position reference distribution (completed: 5 V, not completed: 0 V)	
0D	External encoder speed（1V/1000min^{-1}）	

Reserved setting (Do not change .)

Reserved setting (Do not change)

Pn007	Application Function Selections 7	0000 ～ 005F	—	0000	Immediately	Setup	6.1.2

n.□□□□

Analog Monitor 2 Signal Selection		参照章节
00	Motor speed（1V/1000min^{-1}）	6.1.2
01	Speed command（1V/1000min^{-1}）	
02	Torque command（1 V/100% rated torque）	
03	Position deviation (0.05 V/command unit)	
04	Position amplifier deviation (after electronic gear) (0.05 V/encoder pulse unit)	
05	Position command speed（1V/1000min^{-1}）	
06	Reserved setting (Do not use.)	
07	Load-motor position deviation (0.01 V/command unit)	
08	Positioning completion (positioning completed: 5 V, positioning not completed: 0 V)	
09	Speed feedforward（1V/1000min^{-1}）	
0A	Torque feedforward（1 V/100% rated torque）	
0B	Active gain (1st gain: 1 V, 2nd gain: 2 V,3rd: 3V, 4th :4V)	
0C	Completion of position reference distribution (completed: 5 V, not completed: 0 V)	
0D	External encoder speed （1V/1000min^{-1}）	

Reserved settings (Do not change .)

Reserved settings (Do not change .)

PRM No.	Name	Setting range	Unit	Default	When enabled	Classification	Reference
Pn008	Basic Function Selections 8	0000 ～ 7121	—	0000	After restart	Setup	—

n.□□□□

Low Battery Voltage Alarm/Warning Selection		Reference
0	Output alarm (A.830) for low battery voltage.	5.11.2
1	Output warning (A.930) for low battery voltage.	

Function Selection for Undervoltage		Reference
0	Do not detect undervoltage	—
1	Detect undervoltage warning and limit torque at host controller	
2	Detect undervoltage warning and limit torque with Pn424 and Pn425 (i.e., only in servo drive).	

Warning Detection Selection		Reference
0	Detect warnings.	10.2.1
1	Do not detect warnings	

Reserved parameter (Do not change .)

Pn009	Basic Function Selections 9	0000 ～ 0111	—	0010	After restart	Tuning	—

n.□□□□

Reserved parameter (Do not change.)

Current Control Mode Selection		Reference
0	Use current control mode 1.	—
1	Use current control mode 2	

Speed Detection Method Selection		Reference
0	Use speed detection 1	—
1	Use speed detection 2	

Reserved parameter (Do not change.)

PRM No.	Name	Setting range	Unit	Default	When enabled	Classification	Reference
Pn00B	Basic Function Selections B	0000 ～ 1111	—	0000	After restart	Setup	—

n.□□□□

Operator Parameter Display Selection		Reference
0	Display only setup parameters.	Preface
1	Display all parameters.	

Motor Stopping Method for BM.2 Alarms		Reference
0	Stop the motor by setting the speed command to 0.	5.3.7
1	Apply the dynamic brake or coast the motor to a stop（Stopping method same as Pn001.0 ）	

Power Input Selection for Three-phase servo drive		Reference
0	Use a three-phase power supply input.	—
1	Use a single-phase power supply input.	

Reserved parameter (Do not change.)

PRM No.	Name	Setting range	Unit	Default	When enabled	Classification	Reference
Pn00C	Basic Function Selections C	0000 ～ 0111	—	0000	After restart	Setup	—

n.□□□□

Function Selection for Test without a Motor		Reference
0	Disable tests without a motor.	—
1	Enable tests without a motor	

Encoder Resolution for Tests without a Motor		Reference
0	Use 13 bits	—
1	Use 20 bits.	

Encoder Type Selection for Tests without a Motor		Reference
0	Use an incremental encoder.	—
1	Use an absolute encoder	

Reserved parameter (Do not change.)

PRM No.	Name	Setting range	Unit	Default	When enabled	Classification	Reference
Pn00D	Basic Function Selections D	0000 ～ 1011	—	0000	After restart	Setup	—

n.□□□□

Reserved parameter (Do not change.)

Selection of DB output signal (contact A/contact B)		Reference
0	Contact A	—
1	Contact B	

Reserved parameter (Do not change.)

Overtravel Warning Detection Selection		Reference
0	Do not detect overtravel warnings.	—
1	Detect overtravel warnings.	

Pn010	Axis Address Selection for UART/USB Communications	0000 ～ 007F	—	0001	After restart	Setup	—
Pn080	Reserved parameter	0000~1111	—	0000	After restart	Setup	—

n.□□□□

Reserved parameter (Do not change.)

Reserved parameter (Do not change.)

Reserved parameter (Do not change.)

Reserved parameter (Do not change.)

Pn081	Application Function Selections 81	0000 ～ 1111	—	0000	After restart	Setup	—

n.□□□□

Phase-C Pulse Output Selection		Reference
0	Output phase-C pulses only in the forward direction.	—
1	Output phase-C pulses in both the forward and reverse directions.	

Reserved parameter (Do not change.)

Reserved parameter (Do not change.)

Reserved parameter (Do not change.)

PRM No.	Name	Setting range	Unit	Default	When enabled	Classification	Reference
Pn100	Speed Loop Gain	10 ～ 20000	0.1Hz	400	Immediately	Tuning	—
Pn101	Speed Loop Integral Time Constant	15 ～ 51200	0.01ms	2000	Immediately	Tuning	—
Pn102	Position Loop Gain	10 ～ 20000	0.1/s	400	Immediately	Tuning	—
Pn103	Moment of Inertia Ratio	0 ～ 20000	1%	100	Immediately	Tuning	—
Pn104	2nd Speed Loop Gain	10 ～ 20000	0.1Hz	400	Immediately	Tuning	—
Pn105	2nd Speed Loop Integral Time	15 ～ 51200	0.01ms	2000	Immediately	Tuning	6.9
Pn106	2nd Position Loop Gain	10 ～ 20000	0.1/s	400	Immediately	Tuning	
Pn109	Feedforward	0 ～ 100	1%	0	Immediately	Tuning	
Pn10A	Feedforward Filter Time Constant	0 ～ 6400	0.01ms	0	Immediately	Tuning	
Pn10B	Gain Application Selections	0000~5334	—	0000	—	—	—

n.□□□□

	Mode Switching Selection	When enabled	Classification	Reference
0	Use the internal torque command as condition (level setting: Pn10C)	Immediately	Setup	6.9.5
1	Use the speed command as the condition (level setting: Pn10D)			
2	Use the acceleration reference as condition (level setting: Pn10E)			
3	Use the position deviation as the condition (level setting: Pn10F).			
4	Do not use mode switching			

	Speed Loop Control Method	When enabled	Classification	Reference
0	PI control	After restart	Setup	6.9.4
1	I-P control			
2~3	Reserved parameter (Do not change.)			

Reserved parameter (Do not change.)

Reserved parameter (Do not change.)

Pn10C	Mode Switching Level for Torque Command	0 ～ 800	1%	200	Immediately	Tuning	6.9.5
Pn10D	Mode Switching Level for Speed Command	0 ～ 10000	1min-1	0	Immediately	Tuning	
Pn10E	Mode Switching Level for Acceleration	0 ～ 30000	1min-1/s	0	Immediately	Tuning	
Pn10F	Mode Switching Level for Position Deviation	0 ～ 10000	1 command unit	0	Immediately	Tuning	
Pn11F	Position Integral Time Constant	0 ～ 50000	0.1ms	0	Immediately	Tuning	—
Pn121	Friction Compensation Gain	10 ～ 1000	1%	100	Immediately	Tuning	6.8.2
Pn122	2nd Friction Compensation Gain	10 ～ 1000	1%	100	Immediately	Tuning	
Pn123	Friction Compensation Coefficient	0 ～ 100	1%	0	Immediately	Tuning	
Pn124	Friction Compensation Frequency Correction	-10000 ～10000	0.1Hz	0	Immediately	Tuning	
Pn125	Friction Compensation Gain Correction	1 ～ 1000	1%	100	Immediately	Tuning	
Pn131	Gain Switching Time 1	0 ～ 65535	1ms	0	Immediately	Tuning	6.8.1

Pn132	Gain Switching Time 2	0 ～ 65535	1ms	0	Immediately	Tuning
Pn135	Gain Switching Waiting Time 1	0 ～ 65535	1ms	0	Immediately	Tuning
Pn136	Gain Switching Waiting Time 2	0 ～ 65535	1ms	0	Immediately	Tuning

PRM No.	Name	Setting range	Unit	Default	When enabled	Classification	Reference
Pn139	Automatic Gain Switching Selections 1	0000 ～ 0052	—	0000	After restart	Tuning	—

n.□□□□

Gain Switching Selection		Reference
0	Use manual gain switching.——By external input signal（/G-SEL）	—
1	Reserved setting (Do not use.)	
2	se automatic gain switching pattern 1 The gain settings 1 switch automatically to 2 when switching condition A is satisfied. The gain settings 2 switch automatically to 1 when switching condition A is not satisfied.	

Gain Switching Condition A		Reference
0	Positioning Completion Output (/COIN）ON	—
1	Positioning Completion Output (/COIN）OFF	
2	Near Output signal（/NEAR）ON	
3	Near Output signal （/NEAR）OFF	
4	Position command filter output is 0 and command pulse input is OFF.	
5	Position command pulse input is ON.	

Reserved parameter (Do not change.)

Reserved parameter (Do not change.)

Pn13D	Current Gain Level	100 ～ 2000	1%	2000	Immediately	Tuning	—
Pn140	Model Following Control-Related Selections	0000 ～ 1121	—	0100	Immediately	Tuning	—

n.□□□□

Model Following Control Selection		Reference
0	Do not use model following control	—
1	Use model following control.	

Vibration Suppression Selection		Reference
0	Do not perform vibration suppression	—
1	Perform vibration suppression for a specific frequency.	
2	Perform vibration suppression for two specific frequencies.	

Vibration Suppression Adjustment Selection		Reference
0	Auto-tuning without auxiliary functions.	6.3.1 6.4.1 6.5.1 6.7.1
1	Auto-tuning with auxiliary functions.	

Speed Feedforward (VFF)/Torque Feedforward (TFF) Selection		Reference
0	Do not use model following control and speed/torque feedforward together.	6.3.1 6.4.1
1	Use model following control and speed/torque feedforward together	

PRM No.	Name	Setting range	Unit	Default	When enabled	Classification	Reference
Pn141	Model Following Control Gain	10 ～ 20000	0.1/s	500	Immediately	Tuning	—
Pn142	Model Following Control Gain Correction	500 ～ 2000	0.1%	1000	Immediately	Tuning	—
Pn143	Model Following Control Offset (Forward Direction)	0 ～ 10000	0.1%	1000	Immediately	Tuning	—
Pn144	Model Following Control Offset (Reverse Direction)	0 ～ 10000	0.1%	1000	Immediately	Tuning	—
Pn145	Vibration Suppression 1 Frequency A	10 ～ 2500	0.1Hz	500	Immediately	Tuning	—
Pn146	Vibration Suppression 1 Frequency B	10 ～ 2500	0.1Hz	700	Immediately	Tuning	—
Pn147	Model Following Control Speed Feedforward Compensatio	0 ～ 10000	0.1%	1000	Immediately	Tuning	—
Pn148	2nd Model Following Control Gain	10 ～ 20000	0.1/s	500	Immediately	Tuning	—
Pn149	2nd Model Following Control Gain Correction	500 ～ 2000	0.1%	1000	Immediately	Tuning	—
Pn14A	Vibration Suppression 2 Frequency	10 ～ 2000	0.1Hz	800	Immediately	Tuning	—
Pn14B	Vibration Suppression 2 Correction	10 ～ 1000	1%	100	Immediately	Tuning	—
Pn14F	Control-Related Selections	0000～0011	—	0011	After restart	Tuning	—

n.□□□□

Model Following Control Type Selection		Reference
0	Use model following control type 1	—
1	Use model following control type 2.	

Tuning-less Type Selection		Reference
0	Use tuning-less type 1.	—
1	Use tuning-less type 2.	

Reserved parameter (Do not change.)

Reserved parameter (Do not change.)

Pn160	Anti-Resonance Control-Related Selections	0000 ～ 0011	—	0010	Immediately	Tuning	6.3.1、6.4.1 6.5.1、6.7.1

n.□□□□

Anti-Resonance Control Selection		Reference
0	Do not use anti-resonance control.	—
1	Use anti-resonance control	

Anti-Resonance Control Adjustment Selection		Reference
0	Auto-tuning without auxiliary functions.	—
1	Auto-tuning with auxiliary functions.	

Reserved parameter (Do not change.)

Reserved parameter (Do not change.)

PRM No.	Name	Setting range	Unit	Default	When enabled	Classification	Reference
Pn161	Anti-Resonance Frequency	10 ～ 20000	0.1Hz	1000	Immediately	Tuning	—
Pn162	Anti-Resonance Gain Correction	1 ～ 1000	1%	100	Immediately	Tuning	—
Pn163	Anti-Resonance Damping Gain	0 ～ 300	1%	0	Immediately	Tuning	—
Pn164	Anti-Resonance Filter Time Constant 1 Correction	-1000 ～ 1000	0.01ms	0	Immediately	Tuning	—
Pn165	Anti-Resonance Filter Time Constant 2 Correction	-1000 ～ 1000	0.01ms	0	Immediately	Tuning	—
Pn170	Tuning-less FunctionRelated Selections	0000 ～ 2411	—	1401	—	—	—

n.□□□□

Tuning-less Selection		Effective	Classification	Reference
0	Disable tuning-less function	After restart	Setup	6.2
1	Enable tuning-less function			

Speed Control Method		Effective	Classification	Reference
0	Use for speed control	After restart	Setup	6.2
1	Use for speed control and use host controller for position control			

Rigidity Level		Effective	Classification	Reference
0 ~ 4	Set the rigidity level	Immediately	Setup	6.2

Tuning-less Load Level		Effective	Classification	Reference
0 ~ 2	Set the load level for the tuning-less function	Immediately	Setup	6.2

Pn190	Reserved (Do not change)	0000 ~0011	—	0010	Immediately	—	—

n.□□□□

Reserved parameter (Do not change.)

Reserved parameter (Do not change.)

Reserved parameter (Do not change.)

Reserved parameter (Do not change.)

PRM No.	Name	Setting range	Unit	Default	When enabled	Classification	Reference
Pn200	Position Control Command Form Selections	0000 ～ 2236	—	0000	After restart	Setup	—

n.□□□□

	Command Pulse Form	Reference
0	Sign+ pulse, positive logic	5.5.1
1	CW+CCW pulse trains, positive logic	
2	90° phase differential (phase A and phase B) ×1, positive logic	
3	90° phase differential (phase A and phase B) ×2, positive logic	
4	90° phase differential (phase A and phase B) ×4, positive logic	
5	Sign+ pulse , negative logic	
6	CW+CCW pulse trains, negative logic	

	Clear Signal Form	Reference
0	Clear position deviation when the signal is at high level.	5.5.2
1	Clear position deviation on the rising edge of the signal.	
2	Clear position deviation when the signal is at low level.	
3	Clear position deviation on the falling edge of the signal.	

	Clear Operation	Reference
0	Clear position deviation at a base block (at servo OFF or when alarm occurs)	5.5.2
1	Do not clear position error (cleared only with CLR signal).	
2	Clear position deviation when an alarm occurs.	

	Filter Selection	Reference
0	Use the reference input filter for a line-driver signal. (1 Mpps max.)	5.5.1
1	Use the reference input filter for an open-collector signal. (200kpps max.)	
2	Use reference input filter 2 for a line-driver signal. (1 to 4 Mpps)	

Pn205	Multiturn Limit	0 ～ 65535	1rev	65535	After restart	Setup	—
Pn207	Position Control Function Selections	0000 ～ 2210	—	0000	After restart	Setup	—

n.□□□□

Reserved parameter (Do not change.)

Position Control Option		Reference
0	Do not use V-REF	6.9.3
1	Use V-REF as a speed feedback input.	

Reserved parameter (Do not change.)

/COIN (Positioning Completion Output) Signal Output Timing		Reference
0	Output when the absolute value of the position deviation is the same or less than the setting of Pn522	5.5.6
1	Output when the absolute value of the position error is the same or less than the setting of Pn522 and the reference after the position command filter is 0.	
2	Output when the absolute value of the position error is the same or less than the setting of Pn522 and the command input is 0	

PRM No.	Name	Setting range	Unit	Default	When enabled	Classification	Reference
Pn20A	Number of External Encoder Scale Pitches	4 ～ 1048576	1P/Rev	32768	After restart	Setup	9.2
Pn20E	Electronic Gear Ratio(Numerator)	1 ～1073741824	1	4	After restart	Setup	5.5.4
Pn210	Electronic Gear Ratio (Denominator)	1 ～1073741824	1	1	After restart	Setup	
Pn212	Number of Encoder Output Pulses	16 ～16383	1P/Rev	2048	After restart	Setup	5.5.9
Pn216	Position Command Acceleration/Deceleration Time	0 ～ 65535	0.1ms	0	Immediately	Setup	5.5.5
Pn217	Average Position Command Movement Time	0 ～ 10000	0.1ms	0	Immediately	Setup	
Pn218	Command Pulse Input	1 ～ 100	× 1	1	Immediately	Setup	—
Pn22A	Fully-closed Control Selections	0000 ～ 1003	—	0000	After restart	Setup	—

n.□□□□

Reserved parameter (Do not change.)

Reserved parameter (Do not change.)

Reserved parameter (Do not change.)

Fully-closed Control Speed Feedback Selection		Reference
0	Use motor encoder speed.	9.2.2
1	Use external encoder speed	

Pn240	Mini. time interval for Position deviation clear signal input	0 ～ 2000	ms	0	Immediately	Setup	—
Pn281	Encoder Output Resolution	1 ～ 4096	1 edge/ pitch	20	After restart	Setup	9.2
Pn284	Number of pulses for grating pitch	0000 ～ FFFFH	1 edge/ pitch	0000	After restart	Setup	9.2
Pn2D0	Reserved（Do not change）	0 ～16777216	—	1	After restart	Setup	—

Pn300	Speed Command Input Gain	150 ～ 3000	0.01V	600	Immediately	Setup	5.4.1 5.6.5 6.9.3
Pn301	Internal Set Speed 1	0 ～ 10000	$1min^{-1}$	100	Immediately	Setup	5.7.1
Pn302	Internal Set Speed 2	0 ～ 10000	$1min^{-1}$	200	Immediately	Setup	
Pn303	Internal Set Speed 3	0 ～ 10000	$1min^{-1}$	300	Immediately	Setup	
Pn304	Jogging Speed	0 ～ 10000	$1min^{-1}$	500	Immediately	Setup	7.3
Pn305	Soft Start Acceleration Time	0 ～ 10000	1ms	0	Immediately	Setup	5.4.4
Pn306	Soft Start Deceleration Time	0 ～ 10000	1ms	0	Immediately	Setup	
Pn307	Speed Command Filter Time Constant	0 ～ 65535	0.01ms	40	Immediately	Setup	5.4.5

PRM No.	Name	Setting range	Unit	Default	When enabled	Classification	Reference
Pn310	Vibration Detection Selection	0000 ～ 0002	—	0000	Immediately	Setup	—

n.□□□□

	Vibration Detection Selection	Reference
0	Do not detect vibration	7.15
1	Output a warning (A.911) if vibration is detected.	
2	Output an alarm (A.520) if vibration is detected.	

Reserved parameter (Do not change.)

Reserved parameter (Do not change.)

Reserved parameter (Do not change.)

Pn311	Vibration Detection Sensitivity	50 ～ 500	1%	100	Immediately	Tuning	7.15
Pn312	Vibration Detection Level	0 ～ 5000	$1min^{-1}$	50	Immediately	Tuning	
Pn324	Moment of Inertia Calculation Starting Level	0 ～ 20000	1%	300	Immediately	Setup	—
Pn400	Torque Command Input Gain	10 ～ 100	0.1V	30	Immediately	Setup	5.6.1 6.9.2
Pn401	1st Stage1st Torque Command Filter Time Constant	0 ～ 65535	0.01ms	100	Immediately	Tuning	6.9.6
Pn402	Forward Torque Limit	0 ～ 800	1%	800	Immediately	Setup	5.9.1
Pn403	Reverse Torque Limit	0 ～ 800	1%	800	Immediately	Setup	
Pn404	Forward External Torque Limit	0 ～ 800	1%	100	Immediately	Setup	5.9.2 5.9.3
Pn405	Reverse External Torque Limit	0 ～ 800	1%	100	Immediately	Setup	
Pn406	Emergency Stop Torque	0 ～ 800	1%	800	Immediately	Setup	5.3.5
Pn407	Speed Limit during Torque Control	0 ～ 10000	1min-1	10000	Immediately	Setup	5.6.5

PRM No.	Name	Setting range	Unit	Default	When enabled	Classification	Reference
Pn408	Torque-Related Function Selections	0000 ～ 1111	—	0000	—	Setup	—

n.□□□□

Notch Filter Selection 1		Effective	Classification	Reference
0	Disable first stage notch filter	Immediately	Setup	6.9.6
1	Enable first stage notch filter			

Speed Limit Selection		Effective	Classification	Reference
0	Use the smaller of the maximum motor speed and the setting of Pn407 as the speed limit.	After restart	Setup	5.6.5
1	Use the smaller of the overspeed alarm detection speed and the setting of Pn407 as the speed limit			

Notch Filter Selection 2		Effective	Classification	Reference
0	Disable second stage notch filter	Immediately	Setup	6.9.6
1	Enable second stage notch filter			

Friction Compensation Function Selection		Effective	Classification	Reference
0	Disable friction compensation	Immediately	Setup	6.8.2
1	Enable friction compensation.			

Pn409	First Stage Notch Filter Frequency	50 ～ 5000	1Hz	5000	Immediately	Tuning	6.9.6
Pn40A	First Stage Notch Filter Q Value	50 ～ 1000	0.01	70	Immediately	Tuning	
Pn40B	First Stage Notch Filter Depth	0 ～ 1000	0.001	0	Immediately	Tuning	
Pn40C	2nd Stage Notch Filter Frequency	50 ～ 5000	1Hz	5000	Immediately	Tuning	
Pn40D	2nd Stage Notch Filter Q Value	50 ～ 1000	0.01	70	Immediately	Tuning	
Pn40E	2 nd Stage Notch Filter Depth	0 ～ 1000	0.001	0	Immediately	Tuning	
Pn40F	2nd Stage Second Torque Command Filter	100 ～ 5000	1Hz	5000	Immediately	Tuning	
Pn410	2nd Stage2nd Torque Command Filter Q Value	50 ～ 100	0.01	50	Immediately	Tuning	
Pn412	1st Stage Second Torque Command Filter Time Constant	0 ～ 65535	0.01ms	100	Immediately	Tuning	6.9.2
Pn415	T-REF Filter Time Constant	0 ～ 65535	0.01ms	0	Immediately	—	
Pn423	Reserved（Do not change）	0000 ~1111	—	0000	Immediately	—	—

n.□□□□

Reserved parameter (Do not change.)

Reserved parameter (Do not change.)

Reserved parameter (Do not change.)

Reserved parameter (Do not change.)

PRM No.	Name	Setting range	Unit	Default	When enabled	Classification	Reference
Pn424	Torque Limit at Main Circuit Voltage Drop	0 ～ 100	1%	50	Immediately	Setup	—
Pn425	Release Time for Torque Limit at Main Circuit Voltage Drop	0 ～ 1000	1ms	100	Immediately	Setup	—
Pn456	Sweep Torque Command Amplitude	1 ～ 800	1%	15	Immediately	Tuning	—
Pn460	Notch Filter Adjustment Selections	0000 ～ 0101	—	0101	Immediately	Tuning	6.2.1

n.□□□□

Notch Filter Adjustment Selection 1		Reference
0	Auto-tuning without auxiliary functions.	—
1	Auto-tuning with auxiliary functions.	

Reserved parameter (Do not change.)

Notch Filter Adjustment Selection 2		Reference
0	Auto-tuning without auxiliary functions.	—
1	Auto-tuning with auxiliary functions.	

Reserved parameter (Do not change.)

Pn481	Polarity Detection Speed Loop Gain	10-20000	0.1Hz	400	Immediately	—	—
Pn482	Polarity Detection Speed Loop Integral Time Constant	15-51200	0.01ms	3000	Immediately	—	—
Pn486	Polarity Detection Command Acceleration/ Deceleration Time	0-100	ms	25	Immediately	—	—
Pn487	Polarity Detection Constant Speed Time	0-300	ms	0	Immediately	—	—
Pn488	Polarity Detection Command Waiting Time	50-500	ms	100	Immediately	—	—
Pn490	Polarity Detection Load Level	0-20000	%	100	Immediately	—	—
Pn493	Polarity Detection Command Speed	0-1000	min-1	50	Immediately	—	—
Pn494	Polarity Detection Range	1-65535	0.001rev	250	Immediately	—	—
Pn495	Polarity Detection Confirmation Force Command	0-200	%	100	Immediately	—	—
Pn498	Polarity Detection Allowable Error Range	0-30	deg	10	Immediately	—	—
Pn501	Zero Clamping Level	0 ～ 10000	$1min^{-1}$	10	Immediately	Setup	5.4.6
Pn502	Rotation Detection Level	1 ～ 10000	$1min^{-1}$	20	Immediately	Setup	5.13.5
Pn503	Speed Coincidence Detection Signal Output Width	0 ～ 100	$1min^{-1}$	10	Immediately	Setup	5.4.7
Pn506	Brake Command-Servo OFF Delay Time	0 ～ 50	10ms	0	Immediately	Setup	5.3.6
Pn507	Brake Command Output Speed Level	0 ～10000	$1min^{-1}$	10	Immediately	Setup	
Pn508	Servo OFF-Brake Command Waiting Time	10 ～ 100	10ms	50	Immediately	Setup	
Pn509	Momentary Power Interruption Hold Time	20 ～ 1000	1ms	20	Immediately	Setup	5.3.8

PRM No.	Name	Setting range	Unit	Default	When enabled	Classification	Reference
Pn50A	Input Signal Selections 1	0000 ～ FFF1	—	2100	After restart	Setup	—

n.□□□□

Input Signal Allocation Mode		Reference
0	Use the sequence input signal terminals with the default allocations	—
1	Change the sequence input signal allocations.	

/S-ON (Servo ON) Signal Allocation Signal polarity: Normally ON (L level) at servo ON Signal polarity: Reversed OFF (H level) at servo OFF		Reference
0	Active when CN1-40 input signal is ON(at low level)	—
1	Active when CN1-41 input signal is ON(at low level)	
2	Active when CN1-42 input signal is ON(at low level)	
3	Active when CN1-43 input signal is ON(at low level)	
4	Active when CN1-44 input signal is ON(at low level)	
5	Active when CN1-45 input signal is ON(at low level)	
6	Active when CN1-46 input signal is ON(at low level)	
7	The signal is always active	
8	The signal is always inactive.	
9	Active when CN1-40 input signal is OFF(at high level)	
A	Active when CN1-41 input signal is OFF(at high level)	
B	Active when CN1-42 input signal is OFF(at high level)	
C	Active when CN1-43 input signal is OFF(at high level)	
D	Active when CN1-44 input signal is OFF(at high level)	
E	Active when CN1-45 input signal is OFF(at high level)	
F	Active when CN1-46 input signal is OFF(at high level)	

/P-CON (Proportional Control) Signal Allocation		Reference
0 ~ F	The allocations are the same as the /S-ON (Servo ON) signal allocations.	6.9.4

P-OT (Forward Drive Prohibit) Signal Allocation		Reference
0	Enable forward drive when CN1-40 input signal is ON(at low level)	5.3.5
1	Enable forward drive when CN1-41 input signal is ON(at low level)	
2	Enable forward drive when CN1-42 input signal is ON(at low level)	
3	Enable forward drive when CN1-43 input signal is ON(at low level)	
4	Enable forward drive when CN1-44 input signal is ON(at low level)	
5	Enable forward drive when CN1-45 input signal is ON(at low level)	
6	Enable forward drive when CN1-46 input signal is ON(at low level)	
7	Set the signal to always prohibit forward drive.	
8	Set the signal to always enable forward drive	
9	Enable forward drive when CN1-40 input signal is OFF(at high level)	
A	Enable forward drive when CN1-41 input signal is OFF(at high level)	
B	Enable forward drive when CN1-42 input signal is OFF(at high level)	
C	Enable forward drive when CN1-43 input signal is OFF(at high level)	
D	Enable forward drive when CN1-44 input signal is OFF(at high level)	
E	Enable forward drive when CN1-45 input signal is OFF(at high level)	
F	Enable forward drive when CN1-46 input signal is OFF(at high level)	

PRM No.	Name	Setting range	Unit	Default	When enabled	Classification	Reference
Pn50B	Input Signal Selections 2	0000 ～ FFFF	—	6543	After restart	Setup	—

n.□□□□

N-OT (Reverse Drive Prohibit) Signal Allocation		Reference
0	Enable reverse drive when CN1-40 input signal is ON(at low level)	5.3.5
1	Enable reverse drive when CN1-41 input signal is ON(at low level)	
2	Enable reverse drive when CN1-42 input signal is ON(at low level)	
3	Enable reverse drive when CN1-43 input signal is ON(at low level)	
4	Enable reverse drive when CN1-44 input signal is ON(at low level)	
5	Enable reverse drive when CN1-45 input signal is ON(at low level)	
6	Enable reverse drive when CN1-46 input signal is ON(at low level)	
7	Set the signal to always prohibit reverse drive.	
8	Set the signal to always enable reverse drive.	
9	Enable reverse drive when CN1-40 input signal is OFF(at high level)	
A	Enable reverse drive when CN1-41 input signal is OFF(at high level)	
B	Enable reverse drive when CN1-42 input signal is OFF(at high level)	
C	Enable reverse drive when CN1-43 input signal is OFF(at high level)	
D	Enable reverse drive when CN1-44 input signal is OFF(at high level)	
E	Enable reverse drive when CN1-45 input signal is OFF(at high level)	
F	Enable reverse drive when CN1-46 input signal is OFF(at high level)	

/ALM-RST (Alarm Reset) Signal Allocation		Reference
0	Active on signal edge when CN1-40 input signal changes from OFF to ON	5.12.4
1	Active on signal edge when CN1-41 input signal changes from OFF to ON	
2	Active on signal edge when CN1-42 input signal changes from OFF to ON	
3	Active on signal edge when CN1-43 input signal changes from OFF to ON	
4	Active on signal edge when CN1-44 input signal changes from OFF to ON	
5	Active on signal edge when CN1-45 input signal changes from OFF to ON	
6	Active on signal edge when CN1-46 input signal changes from OFF to ON	
7	Reserved setting (Do not change.)	
8	The signal is always inactive.	
9	Active on signal edge when CN1-40 input signal changes from ON to OFF	
A	Active on signal edge when CN1-41 input signal changes from ON to OFF	
B	Active on signal edge when CN1-42 input signal changes from ON to OFF	
C	Active on signal edge when CN1-43 input signal changes from ON to OFF	
D	Active on signal edge when CN1-44 input signal changes from ON to OFF	
E	Active on signal edge when CN1-45 input signal changes from ON to OFF	
F	Active on signal edge when CN1-46 input signal changes from ON to OFF	

/P-CL (Forward External Torque Limit Input) Signal Allocation		Reference
0 ~ F	The allocations are the same as the /S-ON (Servo ON) signal allocations	5.9.2

/N-CL (Reverse External Torque Limit Input) Signal Allocation		Reference
0 ~	The allocations are the same as the /S-ON (Servo ON) signal allocations	5.9.2

PRM No.	Name	Setting range	Unit	Default	When enabled	Classification	Reference
Pn50C	Input Signal Selections 3	0000 ～ FFFF	—	8888	After restart	Setup	—

n.□□□□

/SPD-D (Motor Direction) Signal Allocation		Reference
0	Active when CN1-40 input signal is ON(at low level)	5.7.1
1	Active when CN1-41 input signal is ON(at low level)	
2	Active when CN1-42 input signal is ON(at low level)	
3	Active when CN1-43 input signal is ON(at low level)	
4	Active when CN1-44 input signal is ON(at low level)	
5	Active when CN1-45 input signal is ON(at low level)	
6	Active when CN1-46 input signal is ON(at low level)	
7	The signal is always active.	
8	The signal is always inactive	
9	Active when CN1-40 input signal is OFF(at high level)	
A	Active when CN1-41 input signal is OFF(at high level)	
B	Active when CN1-42 input signal is OFF(at high level)	
C	Active when CN1-43 input signal is OFF(at high level)	
D	Active when CN1-44 input signal is OFF(at high level)	
E	Active when CN1-45 input signal is OFF(at high level)	
F	Active when CN1-46 input signal is OFF(at high level)	

/SPD-A (Internal Set Speed Selection Input) Signal Allocation		Reference
0 ~ F	Same as the /SPD-D (Motor Direction) signal allocations.	5.7.1

/SPD-B (Internal Set Speed Selection Input) Signal Allocation		Reference
0 ~ F	Same as the /SPD-D (Motor Direction) signal allocations.	5.7.1

/C-SEL (Control Selection Input) Signal Allocation		Reference
0 ~ F	Same as the /SPD-D (Motor Direction) signal allocations.	5.8.1

PRM No.	Name	Setting range	Unit	Default	When enabled	Classification	Reference
Pn50D	Input Signal Selections 4	0000 ～ FFFF	—	8888	After restart	Setup	—

n.□□□□

/ZCLAMP (Zero Clamping Input) Signal Allocation		Reference
0	Active when CN1-40 input signal is ON(at low level)	5.4.6
1	Active when CN1-41 input signal is ON(at low level)	
2	Active when CN1-42 input signal is ON(at low level)	
3	Active when CN1-43 input signal is ON(at low level)	
4	Active when CN1-44 input signal is ON(at low level)	
5	Active when CN1-45 input signal is ON(at low level)	
6	Active when CN1-46 input signal is ON(at low level)	
7	The signal is always active	
8	The signal is always inactive	
9	Active when CN1-40 input signal is OFF(at high level)	
A	Active when CN1-41 input signal is OFF(at high level)	
B	Active when CN1-42 input signal is OFF(at high level)	
C	Active when CN1-43 input signal is OFF(at high level)	
D	Active when CN1-44 input signal is OFF(at high level)	
E	Active when CN1-45 input signal is OFF(at high level)	
F	Active when CN1-46 input signal is OFF(at high level)	

/INHIBIT (Reference Pulse Inhibit Input) Signal Allocation		Reference
0 ~ F	Same as the /SPD-D (Motor Direction) signal allocations	5.5.8

/C-SEL (Control Selection Input) Signal Allocation		Reference
0 ~ F	Same as the /SPD-D (Motor Direction) signal allocations	6.8.1

Reserved parameter (Do not change.)

PRM No.	Name	Setting range	Unit	Default	When enabled	Classification	Reference
Pn50E	Output Signal Selections 1	0000 ～ 4444	—	3211	After restart	Setup	—

n.□□□□

/COIN (Positioning Completion Output) Signal Allocation		Reference
0	Disabled (the above signal output is not used).	5.5.6
1	Output the signal from the CN1-25, 26 output terminal	
2	Output the signal from the CN1-27, 28 output terminal	
3	Output the signal from the CN1-29, 30 output terminal	
4	Output the signal from the CN1-37, 38 output terminal	

/V-CMP (Speed Coincidence Detection Output) Signal Allocation		Reference
0 ~ 4	Same as the /COIN (Positioning Completion) signal allocations.	5.4.7

/TGON (Rotation Detection Output) Signal Allocation		Reference
0 ~ 4	Same as the /COIN (Positioning Completion) signal allocations.	5.12.5

/S-RDY (Servo Ready) Signal Allocation		Reference
0 ~ 4	Same as the /COIN (Positioning Completion) signal allocations.	5.12.6

PRM No.	Name	Setting range	Unit	Default	When enabled	Classification	Reference
Pn50F	Output Signal Selections 2	0000 ～ 4444	—	0000	After restart	Setup	—

n.□□□□

/CLT (Torque Limit Detection Output) Signal Allocation		Reference
0	Disabled (the above signal output is not used).	5.9.5
1	Output the signal from the CN1-25, 26 output terminal	
2	Output the signal from the CN1-27, 28 output terminal	
3	Output the signal from the CN1-29, 30 output terminal	
4	Output the signal from the CN1-37, 38 output terminal	

/VLT (Speed Limit Detection) Signal Allocation		Reference
0 ~ 4	Same as the /CLT (Torque Limit Detection Output) signal allocations.	5.6.5

/BK (Brake Output) Signal Allocation		Reference
0 ~ 4	Same as the /CLT (Torque Limit Detection Output) signal allocations.	5.3.6

/WARN (Warning Output) Signal Allocation		Reference
0 ~ 4	Same as the /CLT (Torque Limit Detection Output) signal allocations	5.12.3

Pn510	Output Signal Selections 3	0000 ～ 4444	—	0000	After restart	Setup	—

n.□□□□

/NEAR (Near Output) Signal Allocation		Reference
0	Disabled (the above signal output is not used).	5.5.7
1	Output the signal from the CN1-25, 26 output terminal	
2	Output the signal from the CN1-27, 28 output terminal	
3	Output the signal from the CN1-29, 30 output terminal	
4	Output the signal from the CN1-37, 38 output terminal	

Reserved parameter (Do not change.)

/PSELA (Command Pulse Input Multiplication Switching Output) SignalAllocation		Reference
0 ~ 4	Same as the /NEAR (Near) signal allocations	5.5.3

Reserved parameter (Do not change.)

Pn511	Input Signal Selection 5	0000 ～ FFFF	—	8888	After restart	Setup	—

n.□□□□

Reserved parameter (Do not change.)

Reserved parameter (Do not change.)

Reserved parameter (Do not change.)

Reserved parameter (Do not change.)

PRM No.	Name	Setting range	Unit	Default	When enabled	Classification	Reference
Pn512	Output Signal Inverse Settings	0000 ～ 1111	—	0000	After restart	Setup	—

n.□□□□

Output Signal Inversion for CN1-25, 26 terminal		Reference
0	The signal is not inverted	—
1	The signal is inverted	

Output Signal Inversion for CN1-27, 28 terminal		Reference
0	The signal is not inverted	—
1	The signal is inverted	

Output Signal Inversion for CN1-29,30 terminal		Reference
0	The signal is not inverted	—
1	The signal is inverted	

Output Signal Inversion for CN1-37, 38 terminal		Reference
0	The signal is not inverted	—
1	The signal is inverted	

PRM No.	Name	Setting range	Unit	Default	When enabled	Classification	Reference
Pn513	Output Signal Selection 4	0000 ～ 3333	—	0000	After restart	Setup	—

n.□□□□

1st Position Output Comparison		Reference
0	Inactive（Do not use the signal output above）	—
1	Output the signals above from CN1-25, 26 terminal	
2	Output the signals above from CN1-27, 28 terminal	
3	Output the signals above from CN1-29, 30 terminal	
4	Output the signals above from CN1-37, 38 terminal	

2nd Position Output Comparison		Reference
0 ~ 4	Same signal assignment as above.	—

3rd Position Output Comparison		Reference
0 ~ 4	Same signal assignment as above.	—

4th Position Output Comparison		Reference
0 ~ 4	Same signal assignment as above.	—

PRM No.	Name	Setting range	Unit	Default	When enabled	Classification	Reference
Pn515	Input Signal Selections 6	0000 ～ FFFF	—	8888	After restart	Setup	—

n.□□□□

Reserved parameter (Do not change.)

/PSEL (Reference Pulse Input Multiplication Switching Input) Signal Allocation		Reference
0	Active when CN1-40 input signal is ON(at low level)	5.5.3
1	Active when CN1-41 input signal is ON(at low level)	
2	Active when CN1-42 input signal is ON(at low level)	
3	Active when CN1-43 input signal is ON(at low level)	
4	Active when CN1-44 input signal is ON(at low level)	
5	Active when CN1-45 input signal is ON(at low level)	
6	Active when CN1-46 input signal is ON(at low level)	
7	The signal is always enabled.	
8	The signal is always inactive.	
9	Active when CN1-40 input signal is OFF(at high level)	
A	Active when CN1-41 input signal is OFF(at high level)	
B	Active when CN1-42 input signal is OFF(at high level)	
C	Active when CN1-43 input signal is OFF(at high level)	
D	Active when CN1-44 input signal is OFF(at high level)	
E	Active when CN1-45 input signal is OFF(at high level)	
F	Active when CN1-46 input signal is OFF(at high level)	

Reserved parameter (Do not change.)

Reserved parameter (Do not change.)

Pn517	Reserved（Do not change）	—	—	0000	—	—	—

n.□□□□

Reserved parameter (Do not change.)

Reserved parameter (Do not change.)

Reserved parameter (Do not change.)

/ALMOutput Polarity Selection		Reference
0	The signal is not inverted	—
1	The signal is inverted	

Pn518	Reserved（Do not change）	0000 ~ 0003	—	0000	After restart	Setup	—
Pn51B	Motor-Load Position Deviation Overflow Detection Level	0 ～ 1073741824	1 command unit	1000	Immediately	Setup	9.2.7
Pn51E	Position Deviation Overflow Warning Level	10 ～ 100	1%	100	Immediately	Setup	10.2.1
Pn520	Position Deviation Overflow Alarm Level	1 ～ 1073741823	1 command unit	52428800	Immediately	Setup	6.1.3 10.1.1

PRM No.	Name	Setting range	Unit	Default	When enabled	Classification	Reference
Pn522	Positioning Completed Width	1 ～ 1073741824	1 command	7	Immediately	Setup	5.5.6
Pn524	Near Signal Width	1 ～ 1073741824	1 command	1073741824	Immediately	Setup	5.5.7
Pn526	Position Deviation Overflow Alarm Level at Servo ON	1 ～ 1073741823	1 command unit	52428800	Immediately	Setup	10.1.1
Pn528	Position Deviation Overflow Warning Level at Servo ON	10 ～ 100	1%	100	Immediately	Setup	10.1.2
Pn529	Speed Limit Level at Servo ON	0 ～ 10000	$1min^{-1}$	10000	Immediately	Setup	10.1.1
Pn52A	Multiplier per Fullyclosed Rotation	0 ～ 100	1%	20	Immediately	Tuning	9.2.7
Pn52B	Overload Warning Level	1 ～ 100	1%	20	Immediately	Setup	—
Pn52C	Base Current Derating at Motor Overload Detection	10 ～ 100	1%	100	After restart	Setup	—
Pn52D	Default single-phase power supply	10 ～ 100	1%	50	—	—	—
Pn52F	Monitor Display at Startup	0000 ～ 0FFF	—	0FFF	Immediately	Setup	8.6
Pn530	Program Jogging Relate Selections	0000 ～ 0005	-	0000	Immediately	Setup	7.5

n.□□□□

Program Jogging Operation Pattern	
0	(Waiting time Pn535 → Forward by travel distance Pn531) × Number of movements Pn536
1	(Waiting time Pn535 → Reverse by travel distance Pn531) × Number of movements Pn536
2	(Waiting time Pn535 → Forward by travel distance Pn531) × Number of movements Pn536 (Waiting time Pn535 → Reverse by travel distance Pn531) × Number of movements Pn536
3	(Waiting time Pn535 → Reverse by travel distance Pn531) × Number of movements Pn536 (Waiting time Pn535 → Forward by travel distance Pn531) × Number of movements Pn536
4	(Waiting time Pn535 → Forward by travel distance Pn531 → Waiting time Pn535 → Reverse by travel distance Pn531) × Number of movements Pn536
5	(Waiting time Pn535 → Reverse by travel distance Pn531 → Waiting time Pn535 → Forward by travel distance Pn531) × Number of movements Pn536

Reserved parameter (Do not change.)

Reserved parameter (Do not change.)

Reserved parameter (Do not change.)

Pn531	Program Jogging Travel Distance	1 ～ 1073741824	1 command unit	32768	Immediately	Setup	7.5
Pn533	Program Jogging Movement Speed	1 ～ 10000	$1min^{-1}$	500	Immediately	Setup	
Pn534	Program Jogging Acceleration/Deceleration	2 ～ 10000	1ms	100	Immediately	Setup	
Pn535	Program Jogging Waiting Time	0 ～ 10000	1ms	100	Immediately	Setup	
Pn536	Program Jogging Number of Movements	0 ～ 1000	1 time	1	Immediately	Setup	
Pn550	Analog Monitor 1 Offset Voltage	-10000 ～ 10000	0.1V	0	Immediately	Setup	6.1.2
Pn551	Analog Monitor 2 Offset Voltage	-10000 ～ 10000	0.1V	0	Immediately	Setup	
Pn552	Analog Monitor 1 Magnification	-10000 ～ 10000	×0.01	100	Immediately	Setup	
Pn553	Analog Monitor 2 Magnification	-10000 ～ 10000	×0.01	100	Immediately	Setup	

Pn560	Residual Vibration Detection Width	1 ～ 3000	0.1%	400	Immediately	Setup	6.7.1
Pn561	Overshoot Detection Level	0 ～ 100	1%	100	Immediately	Setup	—

PRM No.	Name	Setting range	Unit	Default	When enabled	Classification	Reference
Pn587	Reserved（Do not change）	0000 ~ 0001	-	0000	Immediately	Setup	—

n.□□□□

- Reserved parameter (Do not change.)
- Reserved parameter (Do not change.)
- Reserved parameter (Do not change.)
- Reserved parameter (Do not change.)

Pn600	Regenerative Resistor Capacity*1	Depends on model*2	10W	0	Immediately	Setup	5.3.10
Pn601	Reserved（Do not change）	0-65535	—	0	—	Setup	—
Pn602	Encoder Selection	0000 ～ 1115	—	0000	After restart	Setup	—

n.□□□□

Encoder Selection 1		Reference
0	—	—
1	Use the 2nd encoder interface as the 1st encoder interface	

Reserved parameter (Do not change.)

Motor Parameter Source Selection		Reference
0	Use electronic label function	—
1	Use other servo motors.	

CLR Signal Input Selection		Reference
0	Use CN1-14, CN1-15 as CLR input (FPGA program selection for version AA02 or more)	—
1	Use CN1-46, CN1-47 as CLR input	

Pn604	Serial Baud Rate	192 ~ 65535	—	192	After restart	Setup	—

Note: *1. Generally set to "0". When installing an external regenerative resistor, set the capacity (W) of the regenerative resistor.

*2. The upper limit value is the maximum output capacity (W) of the applicable servo drive.

PRM No.	Name	Setting range	Unit	Default	When enabled	Classification	Reference
Pn605	Encoder Shift Function 1	0000 ～ 03FF	—	0000	After restart	Setup	—

n.□□□□

1st Encoder Selection		Reference
0	HCFA	—
1	BISS	
2	YAS	
3	ABZ	
4	AB	
5	SinCOS	

Encoder Speed Selection		Reference
0	2.5M	—
1	1M	
2	2M	
3	3M	
4	4M	
5	5M	
6	8M	

Encoder Resolution	Reference
Represented by 2n bits, such as 23 bit-encoder, just enter 23 directly	—

Pn606	Encoder Shift Function 2	0000 ~ C8C8	—	0000	After restart	Setup	—

n.□□□□

2nd Encoder Data Length		Reference
0 ~ 1	Data length	—

1st Encoder Data Length		Reference
2 ~ 3	Data length	—

PRM No.	Name	Setting range	Unit	Default	When enabled	Classification	Reference
Pn607	2nd Encoder Selection	0000 ~ 0005H	—	0000H	After restart	Setup	—

n.□□□□

	2nd Encoder Selection	Reference
0	HCFA	10.2
1	BISS	
2	YAS	
3	ABZ	
4	AB	
5	SinCOS	

	Encoder Speed Selection	Reference
0	2.5M	—
1	1M	
2	2M	
3	3M	
4	4M	
5	5M	
6	8M	

Encoder Resolution	Reference
Represented by 2n bits, such as 23 bit-encoder, just enter 23 directly	—

PRM No.	Name	Setting range	Unit	Default	When enabled	Classification	Reference
Pn608	2nd Encoder Resolution	0000 ～ FFFFH	—	0000H	After restart	Setup	—

n.□□□□

2nd Encoder Resolution

2nd Encoder Decimal Point

PRM No.	Name	Setting range	Unit	Default	When enabled	Classification	Reference
Pn609	Reserved（Do not change）	0000 ～ FFFFH	—	0000H	—	—	—

n.□□□□

Bit0, 1, 2: Reserved (Do not change) , Bit3： Use hall as the start angle (used in incremental motor)

bit4： F26 Torque command and feedback excessive deviation alarm (Default: 0, closed) bit5： Gravity compensation (Default: 0, closed)，bit6： Reserved （ Do not change ） ， bit7： Delay disabled selection (Default: 0, off)

Bit8~bit15： Sincos/AB encoder standard value, setting range 0~255, Default: 0

PRM No.	Name	Setting range	Unit	Default	When enabled	Classification	Reference
Pn60A	Frequency Division Output Pulse Setting	0000-01FF	—	0000H	After restart	—	—

n.□□□□

Z-pulse width setting

AB reverse direction setting		Reference
0	A before B	—
1	B before A	

Pn60B	Reserved(Do not change)	0-655535	—	0	After restart		
Pn60C	Line Count of Sin/Cos Encoder	0-65535	pulse	0	After restart		
Pn60D	Delay Disabled Count	0~50	2ms	0	After restart		
Pn60E	Torque Overload Threshold Setting	0-65535	%	0	After restart		
Pn60F	User Torque Overload Time	0-65535	10ms	0	After restart		
Pn610	Position Comparison Output Function	0-3	—	0	After restart	—	—

Position Comparison Output Function		Reference
0	OFF	5.12
1	Forward comparison	
2	Reverse comparison	
3	Two-way comparison	

Pn611	1st Setting Position	-1073741824 ～ 1073741823	pulse	0	Immediately	—	5.12
Pn613	2nd Setting Position	-1073741824 ～ 1073741823	pulse	0	Immediately	—	5.12
Pn615	3rd Setting Position	-1073741824 ～ 1073741823	pulse	0	Immediately	—	5.12
Pn617	4th Setting Position	-1073741824 ～ 1073741823	pulse	0	Immediately	—	5.12
Pn619	Active Time of the 1st Setting Position Output Signal	0-65535	ms	0	Immediately	—	5.12
Pn61A	Active Time of the 2nd Setting Position Output Signal	0-65535	ms	0	Immediately	—	5.12
Pn61B	Active Time of the 3rd Setting Position Output Signal	0-65535	ms	0	Immediately	—	5.12
Pn61C	Active Time of the 4th Setting Position Output Signal	0-65535	ms	0	Immediately	—	5.12

Innovation Integrity Service

HCFA

ATC

Zhejiang Hechuan Technology Co., Ltd.

No. 9, Fucai Road, Longyou Industrial Zone, Quzhou City, Zhejiang Province, China

Hangzhou R&D Center

Floor 4, Block D, Quzhou Haichuang Park, No. 1001, Wenyi West Road, Hangzhou City, Zhejiang Province

Tel: 4000126969

Website:https://www.hcfa.com.cn/

EtherCAT® is owned by Beckhoff Automation Co., Ltd.; MECHATROLINK® is owned by the MECHATROLINK Association, which is an open field network;
The other products, product names, and product trademarks or registered trademarks described in this manual are owned by each company